Seismic Performance of Hollow Core Floor Systems

Guidelines for Design Assessment and Retrofit

Structural Engineering Society of New Zealand

New Zealand Society for Earthquake Engineering

New Zealand Concrete Society

Preliminary Draft - April 2009

Supported by

Department of Building and Housing

Te Tari Kaupapa Whare

Seismic Performance of Hollow Core Floor Systems

Guidelines for Design Assessment and Retrofit

Structural Engineering Society of New Zealand
New Zealand Society for Earthquake Engineering
New Zealand Concrete Society

Supported by
Department of Building and Housing

Preliminary Draft – April 2009

Special note to 3 April version

This draft document is work in progress.

The PCFOG recognises the need for guidance material and has issued these draft Guidelines in preliminary draft form.

The group believes the document will be a useful source of information to engineers tasked with designing, assessing or retrofitting buildings with hollow-core floors.

However, users should be aware that many issues have not been resolved to the satisfaction of the PCFOG. The document should not be regarded as a definitive practice guide, but as useful additional information to support the processes of design, assessment and retrofit.

An updated draft for wider comment and trial use will be produced later in 2009.

The PCFOG would welcome constructive comment and suggestions by not later than 20 May 2009. These will be taken into account in producing the next draft.

Department of Building and Housing
Te Tari Kaupapa Whare

Foreword

Following concerns about the structural performance of hollow-core floors there was a clear need for guidance information to improve industry knowledge of the floor behaviour to promote consistent practice. The Department initiated the development of these Guidelines by bringing together representatives of New Zealand Concrete Society, the New Zealand Society for Earthquake Engineering and the Structural Engineering Society of New Zealand.

Design, assessment or retrofit of hollow-core floor systems is a challenging task. These guidelines bring together information to assist those responsible for the manufacture, design, construction and approval of hollow-core floor systems. They provide information to assist TAs, owners and their engineers to design new floor systems, assess existing ones and to decide on appropriate retrofit approaches and techniques.

The Department is pleased to have supported the New Zealand Concrete Society, the New Zealand Society for Earthquake Engineering and the Structural Engineering Society of New Zealand in the development of these guidelines and commends them for use in the industry.

The Department is grateful to the members of the Precast Concrete Floors Overview Group for their knowledge, skills, experience and commitment of time in producing these Guidelines.

David Kelly
Deputy Chief Executive Building Quality
April 2009

Members of the Precast Concrete Floors Overview Group (PCFOG)

Desmond Bull	University of Canterbury/Holmes Consulting Group, Christchurch
Richard Fenwick	University of Canterbury, Christchurch
Rod Fulford	Precast Concrete New Zealand, Auckland
Rob Jury	Beca, Wellington
David Hopkins	Department of Building and Housing, Wellington (Chair)
Graeme Lawrance	Department of Building and Housing, Wellington
Len McSaveney	Golden Bay Cement Company, Auckland, representing NZCS
Stefano Pampanin	University of Canterbury, Christchurch, representing NZSEE
Ashley Smith	Structure Smith, Auckland (SESOC past-President)
Peter Smith	Spencer Holmes, Wellington, representing IPENZ

Acknowledgement

The support of the Department of Building and Housing in facilitating the group's efforts and funding background research is gratefully acknowledged.

The commitment and contribution of group members and their employing organisations is especially appreciated.

Particular thanks are due to Rod Fulford and Len McSaveney for Section 3, to Rob Jury for Sections 4 and 6, to Desmond Bull, Richard Fenwick and Stefano Pampanin for Section 5, and to Peter Smith for Sections 7 and 8. David Hopkins was responsible for final editing and collation, assisted by Dianne Grain.

Disclaimer

These guidelines have been developed to help those with the responsibility for designing, assessing or retrofitting hollow-core floors in New Zealand. It is hoped that they will be of value to experienced structural engineers to help identify potential concerns, provide approaches and techniques for assessment, and develop ideas for retrofit.

The group is conscious that many of the issues covered are being addressed for the first time and with limited or no research or testing to back them up. Care is needed in the use of these guidelines.

Users are encouraged to adapt the material to suit particular situations and to use first principles and other information to resolve a safe course of action.

The Department of Building and Housing, New Zealand Society for Earthquake Engineering, the Structural Engineering Society of New Zealand, the New Zealand Concrete Society, their officers, managers, and members who participated in the development of these guidelines:

> *Do not make any representations, express or implied, as to the accuracy, completeness, or appropriateness for use in any particular circumstances, of any of the information provided, requirements identified, or recommendations made.*
>
> *Do not accept any responsibility for the use or application of, or reliance on these guidelines or any procedures or other information contained in this document.*

Contents

List of Tables

List of Figures

1 Background

Over the last 30 years, considerable use of pre-cast concrete has been made in the construction of buildings in New Zealand for floors, beams, columns and walls. The use of pre-cast concrete has been particularly common in flooring systems, replacing the traditional and more labour-intensive cast insitu concrete. Units incorporating hollow-cores to reduce weight without significant loss of strength or stiffness are structurally efficient and competitive in cost. They became popular for a wide range of buildings in New Zealand and overseas. Reliance for overall continuity and integrity of the floor system is on reinforcement placed in the cast insitu topping slab 50 to 65 mm thick, and on the seating and connection details. Over the years, the thickness of hollow-core units increased from 150 mm to 300 mm and more recently 400 mm and more, with corresponding increases in spans.

Questions were raised about the integrity of hollow-core floors, particularly after some failures in the Northridge earthquake in California in 1994. In October 2001, load tests on a full-scale model of a hollow-core floor assembly at the University of Canterbury [Matthews et al 2003] indicated potentially serious gaps between assumed and actual behaviour of hollow-core floor systems in strong earthquake shaking. The hollow-core units collapsed on to the test floor at lower levels of load than expected, and exhibited brittle failure mechanisms in some elements. The results caused considerable concern among structural designers, territorial authority officials and manufacturers.

In April 2002, the Cement and Concrete Association of New Zealand and the New Zealand Society for Earthquake Engineering set up a Technical Advisory Group representing industry, research, consulting engineering and local authority interests. The Group's role was to interpret the outcome of the University of Canterbury tests, disseminate information and indicate necessary directions of future research and design practice. In August 2002 and October 2003, this Group reported on the test and recommended changes in design approaches. They recommended changes to hollow-core seating and connection details. Changes to the Concrete Design Standard, NZS 3101 [Standards New Zealand 2006], were made effective in March 2004, and cited as a means of compliance with Clause B1 Structure of the Building Code in March 2005. (In August 2008, Amendment 2 to the Concrete Structures Standard NZS 3101 made significant changes to the provisions for the design of hollow-core floors and indicated one preferred support detail for new structures.)

A report by Sinclair Knight Merz to the Building Industry Authority, submitted in November 2003 [Sinclair et al 2003] and prepared partly in response to the Scarry Open Letter [Scarry 2002], had as one of its recommendations that a survey be conducted 'to determine the extent of the hollow-core deficiency that may lead to building failure in a major earthquake event'.

In July 2003, the Building Industry Authority started a review of the use of hollow-core floor systems in New Zealand. The objective was to determine the extent and nature of the use of these systems nationally, to relate that use to particular concerns raised by the University of Canterbury tests and to advise the industry of any concerns. This work has been continued by the Department of Building and Housing.

Output from this work included a review of the performance of hollow-core floors in overseas earthquakes, surveys of details in Christchurch and Wellington, and a review of likely building displacements in Auckland, Wellington and Christchurch [Beca Carter Hollings and Ferner Ltd 2004a, 2004b, 2005a, 2005b]. The Department also supported some ongoing work on failure mechanisms [Fenwick et al 2004].

Since the initial test at the University of Canterbury, two further full-scale tests were performed [Lindsay et al 2004; MacPherson et al 2005]. Each used details recommended in the revisions to NZS 3101 [Standards New Zealand 2006]. Both tests showed markedly improved performance from the original detail.

In June 2005, the Department issued *Practice Advisory 5* highlighting issues of concern and providing recommendations for designers, builders and territorial authority officials.

As a result of its investigations, the Department published a Hollow-core Floor Overview Report in March 2007 [Department of Building and Housing 2007; Stannard et al 2007]. This recommended that owners with concerns have their buildings reviewed by a structural engineer. TAs were also advised to request a report when buildings with hollow-core floors are altered.

With the heightened interest and concern, it was clear that more owners would seek advice on buildings with hollow-core floors. There was an urgent need for guidance material to help designers, particularly to assess existing installations and to devise retrofit solutions.

The Department undertook to support the development of guidance material for designers and territorial authorities. It contacted NZSEE, SESOC and the NZCS to initiate the group that has produced these guidelines.

Care is needed in using this document. It is intended for use by experienced suitably qualified structural engineers. Attention is drawn to the disclaimer on the title page.

1.1 References

Beca Carter Hollings and Ferner Ltd, 2004a. *Review of Hollow-core Flooring Performance in Recent Earthquakes*. Report for Building Industry Authority, May.

Beca Carter Hollings and Ferner Ltd, 2004b. *Survey of Hollow-core Usage in Christchurch*. Report for Building Industry Authority, October.

Beca Carter Hollings and Ferner Ltd, 2005a. *Investigation of the Potential Performance of Hollow-core in Wellington Auckland and Christchurch*. Report for Department of Building and Housing, February.

Beca Carter Hollings and Ferner Ltd, 2005b. *Survey of Hollow-core Usage in Wellington*. Report for Department of Building and Housing, February.

Department of Building and Housing, 2007. *Hollow-core Overview Report.* DBH Report ISBN: 0-478-29792-0 (document), ISBN: 0-478-29793-9 (website), March.

Fenwick R, Deam B, Bull D, 2004. *Failure Modes for Hollow-core Units*. SESOC Journal, June.

Lindsay R, Mander JB, Bull DK, 2004. *Experiments on the Performance of Hollow-core Floor Systems in Pre-cast Concrete Buildings*. Proceedings of the 13th World Conference on Earthquake Engineering, Vancouver, August.

MacPherson CJ, Mander JB and Bull DK, 2005. *Reinforced Concrete Seating Details for Hollow-core Floor Systems*. Pacific Conference on Earthquake Engineering, Wairakei, New Zealand, March.

Matthews JG, Bull DK, Mander JB, 2003. *Preliminary results from the testing of a pre-cast hollow-core floor slab building*. Proceedings of the 2003 Pacific Conference on Earthquake Engineering.

Scarry J, 2002. *An Open Letter to IPENZ Regarding the Parlous State of the Structural Engineering Profession and the Construction Industry in New Zealand*. December (revised from October 2002 version). (Known as the *Scarry Open Letter*.)

Sinclair Knight Merz, 2003. *Significant Design and Construction Issues arising out of a Review of the Scarry Open Letter*. Report for Building Industry Authority, November.

Standards New Zealand, 2006. *Concrete Structures Standard* incorporating Amendments 1 (March 2004) and 2 (August 2008)

Stannard M, Bialostocki R, Hopkins D, Jury R, Saunders D, 2007. *Hollow-core Floors – A Regulator's Perspective*. NZSEE Conference, Palmerston North, March.

2 Introduction

The Department's investigations and the results of research identified that the behaviour of hollow-core floors needed to be better understood and guidance information made more widely available. It was seen as likely that many existing buildings would require evaluation. Guidelines would assist in identifying the key parameters and promoting consistency. There would be value in bringing together some recommended remedial (retrofit) actions. For new buildings guidelines for design and construction needed updating in light of the Canterbury tests and the Department's investigations. Hence the coverage in these guidelines is of design, assessment and retrofit aspects.

The Guidelines are intended to be read in conjunction with NZS 3101:2006, the Concrete Structures Standard and apply to any building with hollow-core floors, whether new or existing. They apply whether or not the building is earthquake-prone or subject to alteration or change of use. The underlying theme of the guidelines is for the structural performance of the hollow-core floor system to comply with the Building Code requirements under full earthquake loading – whether or not this is achieved in a particular case.

The Guidelines address the following issues:

- Structure type and implications: Earthquake performance of hollow-core floors is critically dependent on the displacement the structure experiences and the forces that are induced. For example, ductile frame structures will have higher inter-storey displacements than shear wall structures. In addition, supporting beams may be subject to beam elongation due to plastic hinge formation. However, even in shear wall structures, deformations of the structure can lead to excessive strains on the floor units and/or topping.
- Range of floor systems (floor units plus supporting structure): There is a variety of configurations used. Floor unit depth and span varies. Units may span past intermediate columns. They may be supported on walls or beams. Each configuration may have different implications for the structural performance overall.
- Seating details / performance: Seating details in buildings constructed over the last 30 years vary considerably – from those with generous overlap of unit with the support to those with "negative" overlap that rely on reinforcement in the cores of the units. The behaviour of the floor overall is critically dependent on the detailing of the seating details and associated reinforcement.
- Reinforcement details / performance: Reinforcement is needed for diaphragm action and for bending action in the units. The nature of hollow-core floor units is such that the placement and quantity of reinforcement has a critical influence on overall floor performance. More reinforcement does not necessarily give better performance due to the brittle nature of some failure mechanisms.

- Topping and diaphragm elements and issues: Pre-cast floors came about to replace the highly labour-intensive in-situ floors. In-situ floors had the advantage of being held together strongly by reinforcement between the floor and its supports. Diaphragm action was assured because of this. For hollow-core floors the connection between the floor and the supporting elements is usually confined to 50 to 70 mm of topping. This places much greater demands on the topping slab, all the more so as the depth of the pre-cast floor unit increases. The effectiveness of this connection may be further reduced because of the effects of movement of the adjacent beams relative to the units.
- Influence of structural displacements on floor performance: The Canterbury tests highlighted the influence of structural displacements on floor unit performance. Differential displacements generated over short distances, such as between a supporting beam and a parallel floor unit, were seen to cause failure of the topping and parts of the floor unit. Design and detailing must carefully take account of the possible influence of displacements. This may include beam elongation in ductile frames that rely on beam hinging. Every effort should be made to reduce the relative displacements or accommodate them by separation or introducing flexible link members.
- Guidance for design: This section of the Guidelines is directed exclusively for the design of new installations and must be read in conjunction with NZS 3101:2006. Account is taken of the latest research, testing and theoretical studies.
- Guidance for assessment: The assessment of existing floors is most challenging. Details of the units and supports may be sketchy. They may vary from one place in the building to another. The guidance for assessment recognises these possible variations and provides means for making decisions on overall performance. Again these have been developed taking account of the latest information available.
- Guidance for retrofit: Designing practical remedial measures is particularly challenging for hollow-core floors. The constraints of existing conditions must be accepted and the variability of details allowed for. Furthermore, the range of possible brittle failure mechanisms makes the choice of retrofit detail difficult. For example, the use of a particular detail to achieve adequate support may negate or seriously reduce diaphragm capability. The guidance material highlights these difficulties and provides ideas on how to overcome them. Where possible, solutions to common situations are provided, but designers are urged to consider the potential for detrimental interaction of proposed retrofit measures.

2.1 Outline approach

The approach taken in assembling and presenting the material in this document is shown in the following diagram.

Figure 2.1: Outline approach

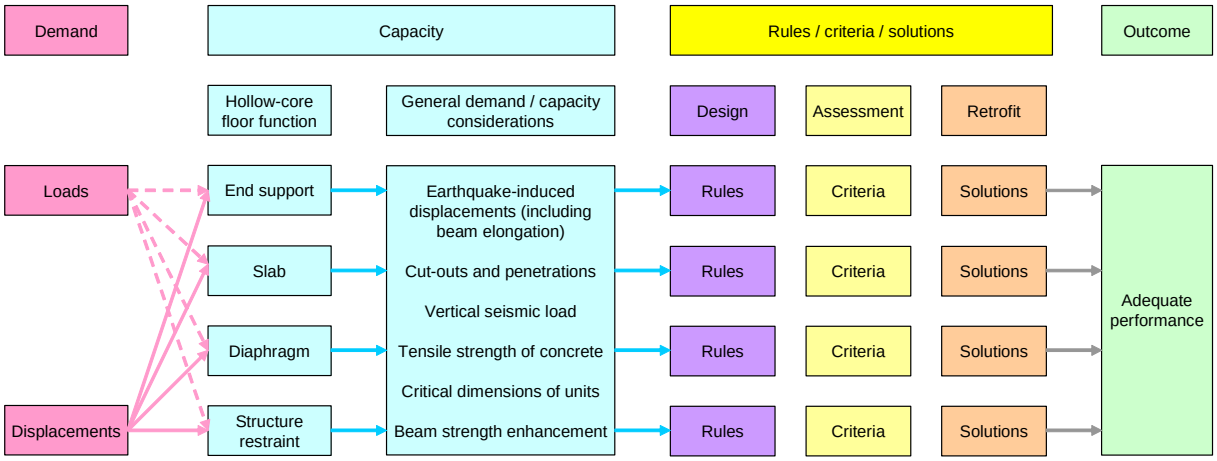

Whether dealing with design, assessment or retrofit, the required outcome is adequate structural performance, which may be generally taken as compliance with the Building Code. Criteria for adequate structural performance may differ for new and existing buildings, but the principle of attaining a defined performance remains the same.

The approach taken is to assess the demand on the hollow-core floor, assess the capacity of the floor and then produce rules, criteria or solutions that will deliver adequate structural performance.

The demands on a hollow-core floor system are essentially loads, such as gravity or seismic, and displacements. Both loads and displacements must be considered when assessing the demand on the floor system, or a particular aspect of its behaviour.

There is a range of possible "failure mechanisms" that need to be considered in assessing the capacity of the floor to meet the demands placed on it. These are described in some detail in the document in order to encourage a high level of understanding of the factors influencing the structural performance of hollow-core floors.

The four aspects of capacity shown in the diagram represent a grouping of these mechanisms in how they affect the key roles of the hollow-core slab system:

- *End support* is critical.
- *Slab action* must be maintained to carry gravity and seismic (horizontal and vertical) loads to the supports.
- *Diaphragm* action must remain viable and in line with assumptions made in the design.
- *Structure restraint* is vital. Global analyses of the structure generally assume that columns are restrained by the floor.

This guidance document encourages the user to think about the above roles of the slab system, and to deal with them one at a time – even though there are interdependencies. Users are encouraged to examine the various demands and the influence they have on capacity. They are given rules for new designs, criteria for assessment and solutions (or approaches) for retrofit.

Users are urged to read these guidelines with this overall approach in mind. It should help to identify the specifics that need to be dealt with in different circumstances.

3 Hollow-core floor units and systems

3.1 Production of hollow-core in New Zealand

Machine produced hollow-core is formed on a long flat bed. The machine travels along the bed forming a continuous finished concrete profile using very dry zero slump concrete that is subjected to high compaction forces to create the finished shape. The finished slab, formed during a single pass of the machine, will have shaped sides that key adjacent slabs together as they are filled with concrete when the topping is placed. It will have between three and six depending on the slab thickness and the manufacturer, and a roughened top surface to bond with the insitu topping. Once the concrete has sufficient strength, the continuous concrete section is cut to specific lengths required for individual slabs.

Performance of hollow-core units depends on the:

1. profile of the unit and its physical dimensions
2. concrete strength
3. compaction of the concrete
4. number and size of the prestressing tendons (strands)
5. level of prestress in the tendons.

Items 1 and 4 can be determined by inspection of hollow-core units prior to the concrete topping being placed.

For item 2, special quality assurance tests are required to verify the performance of this dry-mix concrete when it has been formed into hollow-core units. Production requirements for high early release strengths means nominal 28 day strengths are seldom an issue.

Item 3 has a critical effect on the tensile strength and therefore shear strength and bond to the prestressing tendons. The FIP Guide to good practice "*Quality assurance of hollow-core floor slabs*" [FIP London 1992] gives details of a shear test for quality assurance that also tests the bond of the strand at the extreme ends of the saw cut slabs and the tensile strength of the concrete.

Item 5 is difficult to confirm with accuracy, but the test referred to in the previous paragraph will give a degree of confidence.

In practical terms, the level of prestress, or lack of it, will have little significant effect on the performance of the floor under gravity loads while the underside of the unit remains free of concrete flexural tension cracks.

Typical strengths achieved in hollow-core units are extremely high due to the use of very low water cement ratios, very high compaction forces, and the need for high early strengths to allow distressing and cutting on a 24-hour production cycle. The fact that the unit survives cutting and subsequent handling without obvious distress such as slipping of the tendons due to bond failure or cracking at the ends indicates strengths of about 30 MPa at 16 hours and much higher 28 day strengths.

This provides a quality check that is built in to every unit produced and close inspection by an experienced observer of the ends of the sawcut units prior to the concrete topping being placed can give a high level of confidence of most factors critical to the satisfactory performance of the

unit without further testing. Experience is required to assess the significance of the degree and type of any splitting, cracking, strand pull in, apparent compaction variations.

3.2 Machines and processes

The different machines and processes have their relative merits (often related to machine noise) but the differences in the performance of the end product, from the consumer's point of view, are minor.

In all cases the prestressing tendons are run out along a bed and tensioned. The bed is flat except for small radii to shape the bottom edges of the finished slab.

The machine travels along the bed forming the concrete to shape. A single pass of the machine compacts the concrete around the prestressing tendons and forms the shape of the finished slab complete with continuous voids.

A very dry concrete mix is required for hollow-core production. The concrete must have a suitable workability for the machine to form the concrete to shape and compact it well, while still retaining its profile immediately adjacent to the heavily vibrating machine. It is also required to achieve sufficient early strength for a 24-hour production cycle.

The critical strength is for release (at 16 hours) when a minimum of 30 Mpa is normally required. The 28 day strength is not a manufacturing consideration, but would typically range from 50 MPa to well over 60 MPa.

3.3 Hollow-core machines

Hollow-core casting machines come in many different types. Because of seismic design requirements in New Zealand, manufacturers here have opted for machines that will produce precast units of minimum weight. In countries where most of the precast floors do not have a structural topping, hollow-core units have smaller cores to provide the required fire and acoustic performance without the extra mass of a structural topping. Untopped hollow-core in some earthquake-prone markets use a longitudinally waved shear key to provide a seismic diaphragm (Figure 3.2), while other markets use hollow-core slabs mainly as wall panels and choose machines capable of producing symmetrical sections, with a high-quality finish on all sides.

Machine manufacturers build their extruders and slipformers to suit empirical international guidelines on maximum strand sizes, minimum strand centres, and minimum concrete cover. Depths commonly range from 150 mm to 400 mm, but some producers are now making machines for 600 mm and 800 mm deep floor slabs. As concrete technology improves, span lengths increase.

Special hollow-core sections are also produced for the Termodeck System (Figure 3.3), where cool night air is drawn through the cores of the floor, to reduce the air-conditioning load in the building through the day. Other systems, popular in the Netherlands, allow all building services to be on the occupier's side of the acoustic separation between tenancies, and fully accessible from that side for maintenance (Figures 3.4 and 3.5).

3.3.1 Machine types

Spiroll machines have always been used (and still are) at the Riverbank Rd plant in Otaki. This plant was originally Precast Components until ownership changed in 2006 to Fulton Hogan

operating as Stahlton. No other plants in New Zealand operate Spiroll machines. These machines produce units with circular cores. Spiroll is also an extrusion machine and differs from the other extrusion machines in that the dies that form the finished void rotate, and this limits the voids to a circular shape.

Extrusion machines (Dycore, Stresscore, Partek, Elematic) have been used at all other New Zealand plants. Extrusion machines such as Dycore, Partek, and Elematic force the concrete from the machine under pressure and with high vibration. The concrete is forced through formers to create the finished shape and the machine is propelled along the bed by the pressure of the concrete being forced from it.

Slideformer machines: Precast Systems, Masefield Street, Upper Hutt, operated a Roth slideformer from 1987 until 1995 when it was transferred to Stahlton at Ranui Auckland. In 2003, Echo slideformer machines replaced the Roth. Both of these plants have only used slideformer machines, and slideformer machines have not been used elsewhere in New Zealand. Slideformer machines such as Roth and Echo move along the bed under power rather than being thrust along by the pressure of the concrete being forced from it. They operate in two or three stages. In the first stage the bottom of the slab is placed and compacted around the prestressed tendons near the front of the machine. The vertical webs and top are formed further back along the machine. The finished product is formed over a distance of two or three metres as the machine is travelling. The final profile is being formed some distance from the point where the maximum vibration is required to ensure good compaction around the prestressing tendons.

Slideformer machines are generally able to form a wider range of core shapes.

To date all profiles produced by Precast Systems Upper Hutt and Stahlton Ranui had cores with parallel-sided webs produced by Roth or Echo slideformer machines. Cores that are rounded but elongated were produced by one of the extrusion machines such as Dycore, Partek or Elematic. Cores that are perfectly circular in 200 mm or 300 mm units originating from Otaki, were most likely produced by a Spiroll machine at Riverbank Road.

Because the profile is unsupported by formwork immediately after being formed and heavy vibration is being applied close by, the plastic concrete can be subjected to some slumping to causing the void shape to deform slightly.

3.4 Range of profiles

Diagrams of number of profiles are contained in Appendix 3B.

All hollow-core units produced in New Zealand to date (2009) were on machines set for a 4-foot or 1200 mm module.

Units have been produced with nominal thicknesses of 150, 200, 250, 300, and 400 mm.

The most common thickness has been 200 mm, followed by 300 mm. 400 mm units were not in use in New Zealand until about 1997.

150 mm units had limited early use but were reintroduced at the Stahlton Ranui plant in 2008.

250 mm units were only produced from some plants for a limited time.

Additionally a 320 mm thick Spiroll unit was produced with cores as for a 300 mm unit but with the thickness of the top and bottom flanges increasing by a combined 20 mm.

The number of cores varied from three to six. Thicker units typically have fewer cores, but all units from the Ranui Stahlton plant using the Echo machine from 2003 were made with six cores regardless of thickness.

The dimensions given in manufacturers' literature are nominal and can vary due to slumping of the plastic concrete after the forming process has passed, and due to wear on the formers reducing the void dimensions.

Small increases in hollow-core unit thickness can be made by retaining the core profile while increasing the top and or bottom flange thickness. This increases the concrete volume, cost, and weight.

Increasing the nominal thickness of a hollow-core unit in some cases is only a matter of increasing the height of the webs and does not in itself involve greatly increased cost. Thicker units are generally associated with longer spans and or higher loads which also require additional prestress, but for any particular load span combination, if it is approaching the limit of capacity for a particular thickness of unit, the benefits of using a thicker unit requiring less prestress and providing better performance will often outweigh the relatively small cost increase.

3.5 Amount of prestressing and reinforcing

Machine produced hollow-core in New Zealand typically only has prestressing tendons near the bottom face.

Some machines are able to accommodate a limited number of tendons near the top surface. These can be used to reduce the camber by raising the centroid of the prestressing, but increasing cover to the bottom tendons has the same effect at lower cost. For deeper units (eg, 400 mm) the bottom prestressing has a greater eccentricity and high levels of prestress can induce tension in the top surface. Top tendons can limit tension cracks in the top surface from strand eccentricity, or from handling or stacking with support not located at the extreme ends of the units.

New Zealand manufactured units, as cast, have no transverse reinforcing and no vertical shear reinforcing. Vertical shear reinforcing cannot be incorporated in New Zealand production processes and the web thicknesses would not accommodate stirrups with adequate concrete cover and tolerances. Additional shear capacity is easily achieved by breaking out cores for some distance at the support, placing reinforcing in the cores, and filling with concrete as the topping is placed.

The minimum number of tendons in a 1200 wide unit is not only determined by strength and serviceability requirements, but also by the number required to provide a ductile mode of failure. That is, the flexural capacity of the reinforcing tendons is required to exceed the tensile strength of the concrete by a least 30%.

The maximum number of prestressing tendons that can be used in any profile varies and depends on the geometry of the cross section, cover requirements, manufacturing processes etc. Refer to each manufacturers literature for the maximum possible numbers. 150 mm and 200 mm deep units were most commonly manufactured with six cores and would accommodate a maximum of seven tendons.

Manufacturers load span tables are based on maximum prestress and are not indicative of the capacity of any units actually supplied.

Manufacturers design the units to provide the bending and shear capacity required by the loads specified in the contract documents although they may have been supplied with greater than required prestress to suit manufacturing requirements. For existing buildings, the manufacturer will only be able to supply information regarding the amount of prestress required by their design and will not retain records of additional prestress that may have been used.

Hollow-core units are manufactured on long beds, typically 100–180 metres, and all units in any production run would be manufactured with the same level of prestress. The level of prestress for all units would be determined by the maximum prestress required by any unit in that production run. Units supplied may have more prestress than required by their design or nominated on drawings or production schedules.

Hollow-core units are not particularly sensitive to minor variations in strand location, the water/binder ratio in the concrete or slumping of the webs. Quality assurance tests on the extruded sections are used to determine acceptable tolerances.

3.6 Prestressing tendons (strand)

Seven wire prestressing strand used in hollow-core manufacture is imported into New Zealand from various countries and has been produced to different standards over the years.

Although the standards and nominal diameters vary slightly, most are very similar with the characteristic strength of the strand used being the most significant feature.

Table 3.1: Prestressing tendons to BS 5896:1980

Type	Nominal diameter mm	Nominal stress MPa	Nominal area sq mm	Characteristic strength kN
7 wire standard	9.3	1770	52	93
	11.0	1770	71	125
	12.5	1770	93	164
	15.2	1670	139	232
7 wire super	9.6	1860	55	102
	11.3	1860	75	139
	12.9	1860	100	186
	15.7	1770	150	265

The most common prestressing tendons in current use would be 12.5–12.9 mm diameter with a characteristic strength of 184 to 186 kN.

Early production would have used half-inch or 12.5 mm diameter strand with a characteristic strength of 165 kN. The lower strength was the standard at the time. Higher strength (super) strand required greater bond stress which was more easily achieved as machines and concrete technology developed.

3.7 Topping

3.7.1 Topping thickness

The topping thickness most commonly used has been 65 mm, but this thickness will vary according to the structural requirements. For example transfer diaphragms often require thicker topping and heavier reinforcement than simple diaphragms. The use of cast-insitu drag-strips, the full depth of the floor, has also been common to transfer high forces between load-resisting elements. For topping thicknesses as low as 50 mm, steel fibre reinforced concrete has been used to avoid the loss of concrete cover associated with congestion of overlapping reinforcing bars.

3.7.2 Topping strength

Typical topping concrete strength was 25 Mpa. The bending capacity of the composite floor is not particularly sensitive to the topping concrete strength. Higher strengths would be specified where required for the diaphragm strength, or where the topping was to be cast at the same time as supporting beams requiring higher strengths.

3.7.3 Topping reinforcement

Typical topping reinforcing was 665 HRC mesh over the body of the floor, and starters from the perimeter supports and all supports where the floor does not continue both sides of the support, and normally, but not always, saddle bars over all internal supports.

Starter bars, (and saddle bars where they were used) would typically be 10 mm diameter at 300 centres or 12 mm diameter at 400 centres.

The lack of ductility of HRC mesh has shown shortcomings for use in diaphragms resisting seismic forces and reinforcing bars are now more commonly used for floor topping reinforcing in ductile frame structures.

Higher levels of topping reinforcing may be specified.

Saddle bars will normally contribute to flexural strength and reduce deflections by providing restraint or continuity moments. Hollow-core units are typically unpropped during construction and in those cases the saddle bars are only activated by loads applied to the completed composite floor. This limits the effect of the saddle bars on strength, deflections and serviceability.

3.8 Construction aspects

3.8.1 Propping

Hollow-core floors in New Zealand are normally constructed with no temporary propping, this feature being one of the cost benefits associated with the system.

Propping is used at, or close to, the supports where there is limited seating. For instance at short seating lengths or notches around columns where the bearing is limited. Propping close to the support does not affect the bending strength or deflection performance of the finished floor.

In some cases hollow-core floors may have temporary propping at mid span. This may be for structural reasons to reduce the soffit tension at mid span. The negative reinforcing is mobilised

by self weight of the floor system when the temporary propping is removed thereby reducing mid span moments and deflections. Care must be taken with mid span propping to ensure excessive tensile stresses are not developed at the top of the hollow-core unit.

Mid span temporary propping is sometimes used for architectural reasons to even out the natural variations in camber that occur in longer units where the soffit is to be left exposed. This may be purely for the appearance, but may provide performance benefits as well. The effect of mid span temporary propping on strength, deflections and stresses of the finished floor depend on the force in the props and the ability of the floor to develop restraint moments at the supports as a result of the propping being removed.

When reviewing international practice with regard to hollow-core floor construction details, the use of propping is often a key driver of variations in the detailing. For example:

- in New Zealand, building contractors have ready access to low cost propping systems, so it is more acceptable to use seating details that will require occasional use of propping as part of the remedial work to compensate for inadequate seating lengths resulting from an adverse combination of tolerances
- consequently seating allowances for construction tolerances are less than those in countries where temporary propping of precast floor systems is avoided because of its impact on construction cost and on the building programme
- in some countries, hollow-core units are extensively modified in the precast factory to accommodate site-placed shear stirrups; end core filling, for negative moment capacity; and air circulation ducts, or other mechanical services penetrations. In these cases, site propping is often required to safely support the precast units and maintain their alignment until the composite topping has cured
- all-precast construction systems, which are designed to be constructed without the use of temporary falsework, require seating details that can accommodate the most adverse accumulation of tolerances.

3.8.2 Seating

Different specifiers have taken different approaches to seating of hollow-core units, and there may also have been some regional differences, often related to the propping considerations mentioned above and local contractor's preferences. The following paragraphs give general comment on some typical practices, but reference must be made to the original construction drawings to determine the details used in any particular building.

Early specifications called for precast floor units (not just hollow-core) to be seated on a bed of plastic mortar. Practical experience showed the theoretical benefits were almost impossible to obtain and most floor units were seated directly onto whatever surface they were supported by. Units were seated directly onto hardened concrete, beam or wall formwork, concrete blocks, or steel beams.

Hollow-core units are typically hoisted using slings. When the unit is initially placed, there will be a gap between it and the next unit already in position, to enable the sling to be removed. Once the sling is removed, the unit is slid horizontally to its final position. This disturbance tends to limit the accuracy of the mortar bed, while continued working on the floor units as the deck is prepared for concreting further impairs the effectiveness of mortar seating. Current practice is to only shim and mortar pack if there is gross unevenness that the low-friction bearing strip is unable to accommodate.

These low-friction plastic seating strips (such as the McDowel strip) were introduced into New Zealand in 1996 although they had been in common use in North America since the early 1970s. They overcame the problems associated with mortar beds and allowed faster slab placement. Low-friction bearing pads also improve the serviceability performance by accommodating creep, shrinkage and temperature movements without causing edge spalling. In New Zealand their use increased gradually, becoming more widespread with the introduction of NZS3101:2006.

Seating lengths onto steel or hardened concrete varied, but lengths of 50 mm were often specified. This left little allowance for construction tolerances and where bearing lengths dropped below 50 mm, remedial measures such as addition of reinforcing to the cores were used while temporary propping was provided at the support as a construction safety measure. This was a Department of Labour requirement during the 1980s and the remedial detail had to be approved by a registered engineer before topping concrete could be placed.

Where the units were supported by an insitu concrete beam, and the supporting beam was being cast at the same time as the topping concrete was being placed, the units would normally be supported on the beam formwork and protrude into the boxed up beam. In some cases a McDowel bearing strip has been fixed to the underside of the hollow-core seating area before the concrete is placed to accommodate creep, shrinkage and thermal movements without spalling the edge of the support.

In some cases, typically in Wellington during the 1980s, the hollow-core would seat only onto the cover concrete. This detail was used when designers were trying to achieve the minimum dimensions for the beams, the available seating length was limited to the minimum concrete cover to the beam stirrups, with the placing tolerance accommodated by staggering the placement of the hollow-core units. Refer to *"Guidelines for the use of Structural Precast Concrete in Buildings, Centre for Advanced Engineering"*, 1999.

In other cases, the beam design would provide reinforcing under the hollow-core seating by having different width stirrups to the portion of the beam below the floor seating level. This detail was commonly used prior to the early 1980s.

Where hollow-core units seated onto shell beams, the top edge of the shell beam provided a width or 70 mm or more, and with the tapering shell beam sides there was room to take the hollow-core unit past the shell beam edge and protrude over the beam core without clashing with the beam reinforcement. In these cases, the supplier could detail hollow-core units with a generous seating of 75 mm or more. With the narrow top edge of shell beams, low friction bearing strips for seating were not commonly used until required by NZS3101:2006.

The columns of reinforced concrete buildings designed in New Zealand are generally wider than the beams. Concrete cover to columns is generally insufficient to allow hollow-core seating to comply with design codes.

A commonly used detail to overcome the recurring problem of short seating, whether by design such as at columns, or as a result of construction tolerances, was to break out the tops of the cores, place D10, hair pin shaped bars from the support into the cores, and fill with compacted concrete as the topping was placed. Refer to *"Guidelines for the use of Structural Precast Concrete in Buildings, Centre for Advanced Engineering"*, 1999.

This detail was borrowed from North American practice and the number of bars was calculated by a shear-friction analysis (section 7.7, NZS 3101:2006), or by 30 degree kinking, to carry the full ultimate end shear. The completed floors were tested to verify the capacity of this remedial

detail that was simple yet effective. Shear friction is an effective mechanism for low crack widths, but if beam elongation or displacement incompatibility was expected to cause wider cracks than aggregate interlock could cope with, the 30 degree bar kinking model was used to calculate the shear capacity across the open crack. Reference is Herlihy, PhD thesis, Canterbury University 1994. Testing at Works Central Laboratories (Blades et al 1990) and Canterbury University (Herlihy 1994) confirmed its suitability.

During the 1990s the problem of sun camber became apparent. Where the top surface of a floor is exposed to the sun, such as in parking buildings, the thermal gradient through the floor thickness resulting from solar heating caused more expansion of the top surface. The result of this is a daily hogging of the floor that causes a rotation at the support and sliding at the seating. Continual sliding at the support caused spalling that could progress and compromise the support. Use of the McDowel bearing strip introduced in 1996 overcame this problem. The bearing strip is high strength plastic with a serrated underside to prevent it moving on the support, and a low friction top surface that permits the precast unit to slide without damaging either surface. They also provided the benefit of faster erection by enabling the units to be more easily moved on their support after placing by crane and before the topping was placed.

The publication of Amendment No. 3, to NZS 3101:1995, in March 2004, following the recommendations of the Hollow-core Support Technical Advisory Group, made the use of bearing strips, and a full 75 mm seating length mandatory, unless it could be shown by analysis or test that the performance of alternative details would be acceptable.

3.8.3 Spaced hollow-core units

Spaced hollow-core became more widely used around the mid 1990s. The 1200 mm wide hollow-core units are spaced 400 mm to 800 mm apart. Permanent timber infill formwork is seated into notches in the hollow-core units and an insitu slab formed over the timber, as the topping is placed. The 35 mm deep notches in the hollow-core units give 75 topping over the 25 mm timber infills when 65 mm is used over the precast unit.

This resulted in lighter cheaper floors and it was easier to accommodate services within the timber infill sections. Temporary propping during placing of the concrete topping would often be required to support the additional construction load on each unit.

Around 2000, deeper recesses, to seat the timber in-fills lower, were used by some manufacturers to enable the spaced infill floors to provide the acoustic separation required between residential units, and a higher fire rating.

3.9 Hollow-core in existing New Zealand building stock

The Department of Building and Housing published “Hollow-core Floor Overview Report” in 2007 and it is available from their website: www.dbh.govt.nz/technical-reports.

The Overview Report gives background to the concerns relating to existing buildings with hollow-core floors in New Zealand. It also gives information on research and testing that has been carried out and it gives summaries of hollow-core use in different areas and for different building types.

Because of the concerns that arose from a full scale test when unexpected failures occurred at large drift displacements in a ductile frame with very specific characteristics, a survey of hollow-core use in the three main centres was carried out. From this it was concluded that:

- Auckland contains more than 50% of the installed hollow-core in New Zealand and because of the predominance of stiff buildings and lower seismic drift, they were unlikely to present a significant risk
- a total of 13 buildings in Wellington were brought to the attention of the territorial authority as warranting further investigation
- in Christchurch two buildings were referred to the territorial authority as warranting further investigation.

The survey could not examine all buildings in detail, and Engineers should not rely on the results of the survey or its conclusions when called upon to report on a particular building.

The following tables taken from the Overview Report give an indication of hollow-core use in New Zealand. The information is incomplete and reference should be made to the full report. The categorisation of the buildings as shear wall or frame is based on the supplier's interpretation and while giving a general indication, cannot be relied upon as definitive.

Table 3.2: Hollow-core use in Auckland: 1981 to 2003

Size	Date	Shear wall		Frame		Shear wall + frame
		m^2	%	m^2	%	m^2
H200	81–85	2,380	61%	1,508	39%	3,888
	86–90	7,232	26%	20,181	74%	27,413
	91–95	45,371	73%	16,918	27%	62,289
	96–00	147,620	73%	53,853	27%	201,473
	01–05	82,709	80%	21,248	20%	103,957
	H200 all years	**285,311**	**72%**	**113,708**	**28%**	**399,019**
H250	81–85	0		0		0
	86–90	9,195	34%	17,890	66%	27,085
	91–95	582	55%	480	45%	1,062
	96–00	0	0%	720	100%	720
	01–05	0		0		0
	H250 all years	**9,777**	**34%**	**19,090**	**66%**	**28,867**
H300	81–85	311	100%	0	0%	311
	86–90	3,943	58%	2,380	42%	6,773
	91–95	83,955	77%	24,713	23%	108,668
	96–00	87,727	82%	19,389	18%	107,116
	01–05	73,965	77%	21,959	23%	95,924
	H300 all years	**249,901**	**78%**	**68,891**	**22%**	**318,792**
H400	81–85	0		0		0
	86–90	0		0		0
	91–95	0	0%	127	100%	127
	96–00	15,138	72%	5,767	28%	20,905
	01–05	13,744	92%	1,128	8%	14,872
	H400 all years	**28,882**	**80%**	**7,022**	**20%**	**35,904**
	Total all	**573,871**	**73%**	**208,711**	**27%**	**782,582**

Table 3.3: Hollow-core use in Christchurch, Wellington and Auckland

Area vs depth – Christchurch				% vs depth – Christchurch				Units 300 mm or more	
HC unit (see note)	**m^2 Stiff**	**m^2 Flexible**	**m^2 Total**	**Size**	**% Stiff**	**% Flexible**	**% CHC total**	**m^2 Total**	**m^2 Flexible**
H150	7,200	2,700	9,900	H150	73	27	4		
H200	126,100	36,600	162,700	H200	78	22	63		
H250	0	0	0	H250			0		
H300	60,000	3,100	63,100	H300	95	5	24	63,100	3,100
H350	5,500	0	5,500	H350	100	0	2	5,500	0
H400	18,000	0	18,000	H400	100	0	7	18,000	0
	216,800	**42,400**	**259,200**				**100**	**86,600**	**3,100**
	84%	**16%**	**100%**		**Christchurch is**		**17%**	**33%**	**1.2%**
Unit mark is H followed by depth in millimetres							**of NZ total**	**of total for Christchurch**	

Area vs depth – Wellington				% vs depth – Wellington					
HC unit (see note)	**m^2 Stiff**	**m^2 Flexible**	**m^2 Total**	**Size**	**% Stiff**	**% Flexible**	**% WGN total**	**m^2 Total**	**m^2 Flexible**
H150	12,100	10,200	22,300	H150	54	46	5		
H200	110,000	250,000	360,000	H200	31	69	77		
H250	1,900	0	1,900	H250			0		
H300	84,000	2,000	86,000	H300	98	2	18	86,000	2,000
H350	0	0	0	H350			0	0	0
H400	0	0	0	H400			0	0	0
	208,000	**262,200**	**470,200**				**100**	**86,000**	**2,000**
	44%	**56%**	**100%**		**Wellington is**		**31%**	**18%**	**0.4%**
Unit mark is H followed by depth in millimetres							**of NZ total**	**of total for Wellington**	

Area vs depth – Auckland				% vs depth – Auckland					
HC unit (see note)	**m^2 Stiff**	**m^2 Flexible**	**m^2 Total**	**Size**	**% Stiff**	**% Flexible**	**% WGN total**	**m^2 Total**	**m^2 Flexible**
H200	285,311	113,708	399,019	H200	72	28	51		
H250	9,777	19,090	28,867	H250	34	66	4		
H300	249,901	68,891	318,792	H300	78	22	41	318,792	68,891
H400	28,882	7,022	35,904	H400	80	20	5	35,904	7,022
	573,871	**208,711**	**782,582**					**354,696**	**75,913**
	73%	**27%**	**100%**		**Auckland is**		**52%**	**45%**	**9.7%**
Unit mark is H followed by depth in millimetres							**of NZ total**	**of total for Auckland**	

Total all three centres					
	998,671	**513,311**	**1,511,982**	**527,296**	**81,013**
	66%	**34%**	**100%**	**35%**	**5.4%**
				of total for NZ	

Stiff – denotes hollow-core in buildings where assessed inter-storey deflection in a major earthquake would be **less** than 1% of storey height.

Flexible – denotes hollow-core in buildings where assessed inter-storey deflection in a major earthquake would be **more** than 1% of storey height.

3.10 Determining details of slabs

Details of hollow-core units in an existing building can only be obtained with certainty from the original manufacturer of the units. With changes of ownership, plant closures and the passage of time, information relating to older buildings may not be available from the manufacturer but, if available, is the often the only source of reliable information.

The original permit drawings from the Engineer specifying a particular product may be correct but can not be relied upon because the builder may have accepted an alternative supplier's tender and may even have used a totally different type of floor. Unit sizes are sometimes adjusted during construction to accommodate changes to loads for services or client requirements, or because the original units specified were not the most suitable.

A visual site inspection will provide little information on hollow-core units unless a core is broken out from the underside. That will enable an assessment of unit depth and core configuration to be made. That information together with building location and date of construction will indicate likely manufacturers. This process should involve someone with in depth experience of the manufacturing industry.

3.11 Historical background

3.11.1 Early New Zealand practice

The earliest precast, prestressed hollow-core flooring in New Zealand was produced during the late 1960s. Cardboard, or rubber tubes, were used to form circular voids. Stresscrete produced cores; and 9 inches (229 mm) deep with 5–171 mm diameter cores. B&B Concrete Ltd made similar slabs, which were 8 inches and 12 inches deep (Figure 3.1). In the mid 1970s, Stresscrete also used urea formaldehyde, and later, polystyrene foam, to form rectangular cores (3 No. 130mm deep by 320 mm wide in 200 mm deep by 1200 mm wide precast units). The foam was left in place. In both of these production methods, medium slump (120 to 150 mm) 42 MPa concrete was vibrated into place and the units were reinforced with conventional 6 mm stirrups. They were typically prestressed with seven-wire Regular Grade, 9.3 mm or 10.9 mm diameter strands of 94 kN or 125 kN ultimate tensile capacity and were designed to act compositely with a 60 mm thick concrete topping layer.

For government buildings, or buildings seeking to have government departments as tenants, *PW 81/10/01 (Design of Public Buildings, Code of Practice, Ministry of Works, Wellington, 1970)* required:

- a structural topping thickness of 2.5 inches (65 mm)
- ties between the topping concrete and the precast section, equivalent to one six-gauge double-leg tie (or equivalent) every three square feet (0.3 m^2). The spacing of these ties was originally 18 inches (450 mm), but was later increased to 24 inches (600 mm)
- minimum bearing length of three inches (75 mm) as defined in ACI 512.67, with the principal longitudinal reinforcement extending 2.5 inches over the support
- all precast units to be bedded on plastic mortar
- continuous construction inspection by a Clerk of Works.

Other consultants preferred to follow the recommendations of the American Prestressed Concrete Institute, but it was common practice to closely supervise the manufacture of all types of precast flooring and its installation.

In November 1974, B&B Concrete in Auckland introduced the first Dycore, hollow-core extruding machine to New Zealand. That machine produced 1.21 m wide by 203 mm (and 305 mm) deep sections, the full length of the 41 m casting bed. After steam curing overnight, individual units were saw-cut to length the next day and stacked for transport to the site. The extrusion machines of that time could not accommodate transverse reinforcing bars, or stirrups, so extensive testing was undertaken in Europe and North America, to confirm the shear capacity of these units. References to these early tests can be found in the PCI and ACI Journals, and in "*Manual for the Design of Hollow Core Slabs*" PCI, Chicago, 1985.

Figure 3.1: Coredex profile, B&B Concrete 1970s

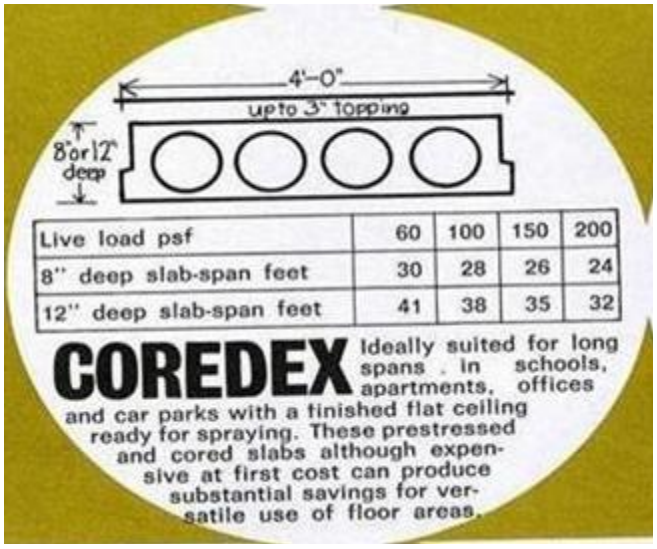

Continuity and diaphragm action was achieved by means of welded-wire mesh and saddle bars in a 60 mm thick composite concrete topping layer. B&B's product literature called for the units to be seated on a 50 mm wide bed of wet mortar, but this mortar was only used if the supports were very uneven and likely to spall. Most flooring units were seated directly on the supporting beams or walls. Market penetration was slow, and in 1976, B&B Concrete was purchased by Stresscrete Industries Ltd.

The market for precast building systems grew steadily through the late 1970s and by the early 1980s Dycore was replacing Vibradek and the other prestressed rib and masonry infill flooring systems. Hollow-core offered the advantages of reduced propping, a flat soffit, faster erection, a safe and stable working platform, and low cost. Simple details were developed to cope with erection tolerances and Dycore took an increasing share of the precast flooring market for spans in the 6 to 12 metre range.

A principal specifier of hollow-core in buildings in the 1970s and through the 1980s was the Auckland practice of Carl O'Grady, later O'Grady and Mitchell. Their philosophy of "all precast construction" suited the needs of property developers of that time. They followed the structural design approach of California, using simple structural forms (precast frames, or precast shear walls) in low-drift buildings. They had their own proprietary method for optimizing the performance of precast shell beams and hollow-core floors in multi-storey structures. Slab seating lengths were generous and there was regular inspection during both the precast fabrication and site erection.

Figure 3.2: Topping-less floors act as seismic diaphragms in Italy

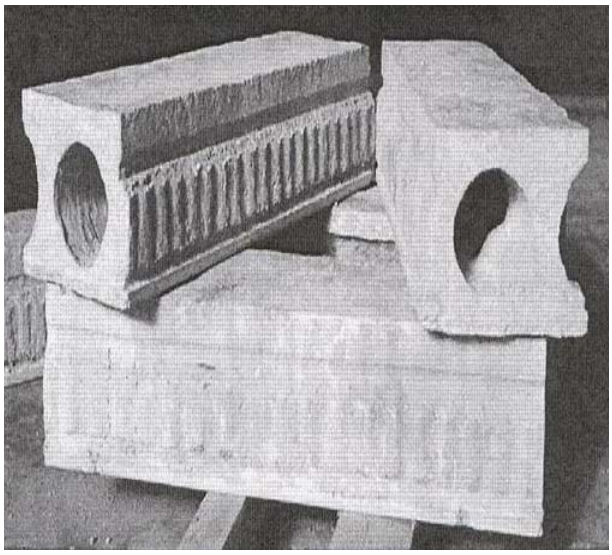

Note: Smaller diameter cores, to meet fire resistance ratings.

Figure 3.3: Termodeck

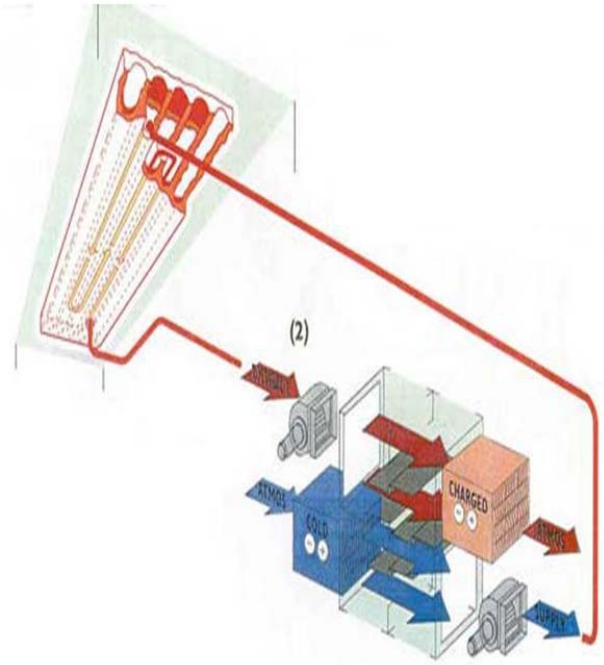

Low energy structural ceiling slab system providing thermal storage at room temperature, cooling without refrigeration and ventilation without recirculation.

Figure 3.4: Pipefloor

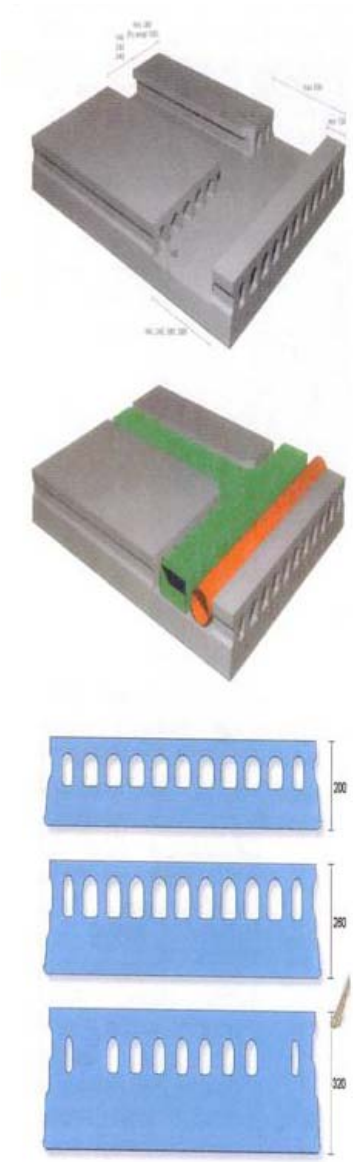

Pipefloor is a popular use of hollow-core in the Netherlands. All services are on the occupier's side of the acoustic separation between apartments.

Figure 3.5: Pipefloor in practice

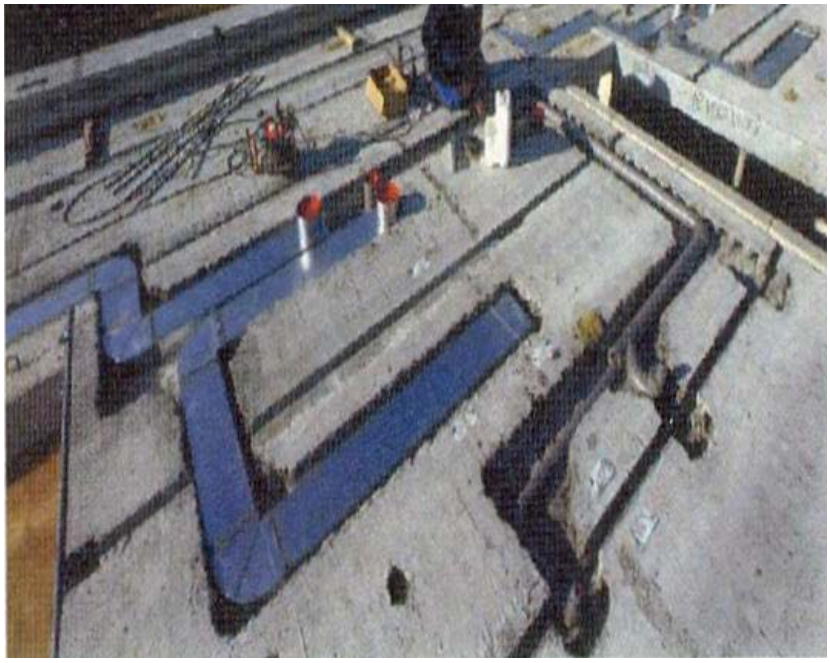

Most hollow-core casting machines are capable of accommodating a limited number of top pre-tensioning strands, but these are rarely required. They are sometimes used in deeper units if there is concern about the possibility of tensile failure in the top flange of the bare unit during handling. With the hollow-core profiles used in New Zealand, web widths are able to safely cope with construction load stresses without the use of stirrups. Where service load shear stresses exceed allowable values for the precast section, additional shear capacity can be added in selected cores, or in the shear keys between adjacent units. The addition of stirrups in the cores has been common practice in worldwide at cut-outs; under concentrated loads; or for units at the extreme end of their load-span range.

Stirrups, or shear-connector ties, have also been frequently used where seismic shear in diaphragms exceeds the allowable interface shear for an un-reinforced connection.

3.11.2 Early seating practices

New Zealand hollow-core details followed 1970s North American practice, with a nominal seating length of two inches (50 mm). Bearing pads were not used in New Zealand although in

the USA and Canada, it was common practice to seat hollow-core slabs on strips of rubber, plastic, or hard-board (Masonite). In New Zealand, if supporting surfaces were rough, the units were bedded on plastic mortar, but in most cases, direct concrete to concrete, or concrete to steel contact was accepted. A seating length of 65 mm was commonly used when bearing on concrete masonry, with the floor unit passing over the face shell and onto the grouted core.

Construction tolerances were a recurring problem and short seating was overcome by inserting d10, hair-pin shaped bars in the cores and breaking out the top of those cores to ensure adequate compaction of the topping concrete around the bars (Figure 3.6). This detail was borrowed from North American practice and the number of bars was calculated by a shear-friction analysis (section 7.7, NZS 3101:2006) to carry the full ultimate end shear. The completed floors were tested in accordance with the requirements of section 18 of NZS 3101:1995 to verify the capacity of the remedial detail.

This detail was simple but effective. Testing at Works Central Laboratory [Blades et al 1990] and Canterbury University [Herlihy 1994] confirmed its ductility and suitability. Herlihy extended the design method to allow for beam-elongation, or complete lack of support, and recommended the 30 degree kinking model to carry vertical shear across a wide crack. Both design methods give similar results in terms of the required bar area to resist the factored load shear.

The detail is widely used in North America, Europe and Asia and a number of additional tests were carried out for New Zealand consultants to provide assurance and obtain acceptance on specific projects.

This remedial detail became a commonly used method of overcoming short seating due to any construction or manufacturing tolerances, or for use where hollow-core units passed columns and full seating was impractical. Bars in alternate cores provided a quick, simple and effective means of accommodating construction tolerances and contributed to hollow-core flooring gaining widespread acceptance wherever it was available in New Zealand.

Different details were used by some consultants who considered much smaller seating acceptable and in some cases stopped the hollow-core units short of their support and relied on reinforcing from the cores projecting into the support to provide the total connection and transfer the shear. Such details were not widely used.

Figure 3.6: The nil support detail

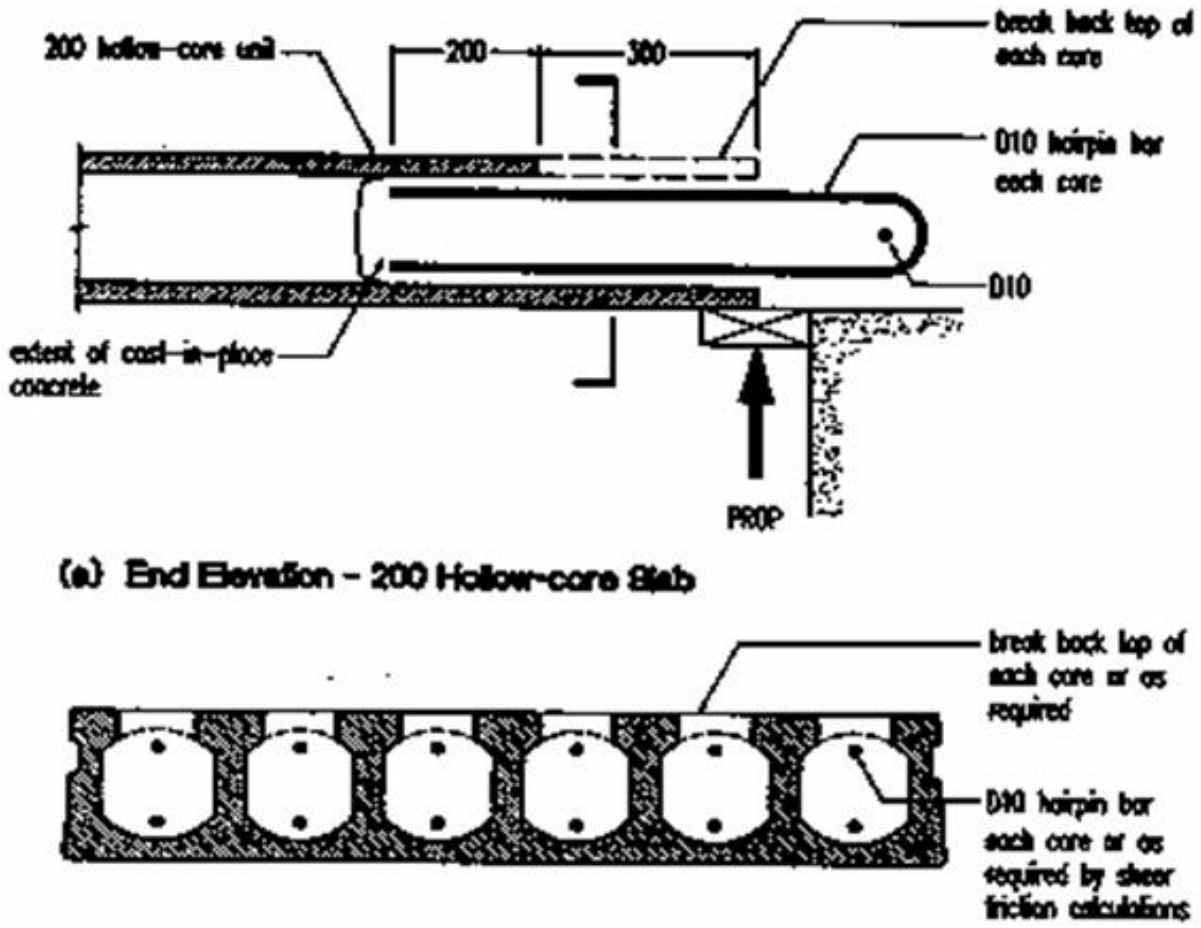

Tested by Opus Central Labs 1990, and modified by Herlihy 1994.

By the mid 1990s there had been a small number of hollow-core support spalling problems associated with the effects of sun-camber on the top levels of parking structures (Figure 3.7). To solve this, the McDowell bearing strip was introduced in 1996. This bearing strip was modelled on common North American practice, where the use of a plastic strip, smooth on one side, but with a higher coefficient of friction on the reverse side, provides a slip-layer to accommodate thermal movement without the danger of it working its way out over a few thousand thermal cycles. Plastic bearing strips however were only seen as necessary in floors exposed to direct sun. In general construction, the McDowell Bearing Strips were used by a few contractors who realised that the advantage of faster precast erection more than offset the cost of the bearing strips, but their use was not common for some time after their initial introduction.

Figure 3.7: Bearing strips avoid sun-camber damage on the upper levels of parking structures

Publication of Amendment No. 3, to NZS 3101:1995, in March 2004, made the use of bearing strips, and a full 75 mm seating length, mandatory unless it could be shown by analysis or test that the performance of alternative details would be acceptable.

Figure 3.8: Formers for filled cores

Cores are filled with topping concrete for a length equal to the depth of the section. This is a FIB recommendation to prevent web splitting when the bottom flange is required to resist high compression.

Bulletin 6, of the fib, *"Special design considerations for precast prestressed hollow-core floors"* [FIB January 2000], recommends filling all cores, for length equal to the depth of the hollow-core unit, where the precast unit is designed to take significant compression in the bottom flange (Figure 3.8). This recommendation is based on non-linear finite element analysis and comprehensive testing [Akesson 1993], [Gryzbowski 1991] and is aimed at preventing web-splitting. It has not been adopted in New Zealand but the two details (now only one) in section C18 of NZS 3101 Part 2:2006, achieve the same purpose, although in a slightly more complex way.

The "Grey Book" *Guidelines for the Use of Structural Precast Concrete in Buildings* provided a comprehensive summary of the state of the art, worldwide, with regard to floor unit support and continuity. It was widely followed in New Zealand after it was published in August 1991.

3.11.3 Research on hollow-core floors

3.11.3.1 Early research

New Zealand has relied heavily on the results of overseas research for the design and manufacture of precast hollow-core flooring. Nevertheless, seismic design concepts vary around the world resulting in some unique issues for us to solve. One being the use of Capacity Design techniques for the construction of ductile moment-resisting frame buildings, with discrete hinging zones in the beams and relatively high lateral displacement of 2% of the floor to floor height.

Beginning in the early 1990s, Canterbury University instigated a number of research projects aimed at gaining a better understanding of how the support of precast floors could be detailed to accommodate the type of displacement incompatibility expected with modern capacity design. In particular, research was focused on how precast floors would cope with the beam elongation associated with plastic hinge formation in ductile moment resisting frame buildings.

The emphasis was primarily on pulling hollow-core slabs off their supporting beams [Herlihy 1995] but rotation was also applied to the beam to floor junction to pre-crack the connection before the direct tension was applied. Herlihy built on the earlier work of Mejia-McMaster [1994] and Engstrom [1992] to develop a simple paperclip detail that could cope with a complete loss of support as a result of beam elongation, loss of seating cover at plastic hinges, or concentrated forces at strut and tie node points.

At the time that Herlihy was completing his experimental work, Los Angeles was severely shaken by the Northridge earthquake resulting in the failure of a number of structural steel and reinforced concrete framed buildings. Two failures of hollow-core floors were reported over the wide area affected by the Northridge earthquake. The first was a sloping ramp, which was incorrectly detailed to act as a strut. The second failure occurred in the parking structure of the Meadows Apartment building, where the failure of un-braced steel frames and poorly detailed chord reinforcement in this single suspended level structure removed the support at the ends of the hollow-core slabs, allowing whole bays to collapse when the topping mesh fractured. In some bays, the hollow-core units also separated from the topping (or from the top flange) where the welded wire mesh had not fractured.

The New Zealand reconnaissance team brought back photographs of this failure, which indicated that the floor was not typical of New Zealand construction:

- Support at the ends had been as little as 10 mm, with no additional core reinforcement provided to comply with the local building code requirements.
- Diaphragm continuity was provided solely by the mesh, with no ductile saddle bars.
- Laps in the perimeter chord tie-bars were poorly detailed for cyclic loading.

The photographs showed that the hollow-core units had pre-existing web-splitting cracks likely to have been caused by saw-cutting the units to length before the concrete had reached the required transfer strength. Seismic performance of the floor depends on concrete tension and pre existing cracks at the point of maximum shear would be expected to have an adverse effect. Such cracks may not prevent the floor carrying the required gravity loads, but they are significant when horizontal shear is or could be imposed by support rotation in ductile frame buildings.

Although the details were not altogether typical of New Zealand construction, there was sufficient concern to prompt further research on the behaviour of hollow-core floors for New Zealand conditions, particularly the effects of earthquake-induced displacements.

3.11.3.2 Full-scale 3-d tests at the University of Canterbury

This concern led to industry support for a full-sized super-assembly to be tested using 300 mm hollow-core units supported on beams forming part of a ductile moment-resisting frame. That test, which has become known as the Matthews' Test [Matthews 2006] showed that the type of failure that had occurred at the Meadows Apartment parking structure could be replicated at a lateral drift of 2%, under the following conditions:

- The hollow-core units spanned two bays of a stiff moment resisting perimeter frame structure, with no allowance for displacement incompatibility with the adjacent beams spanning in the same direction as the hollow-core flooring. The floor units spanned two bays of the parallel frame resulting in major displacement incompatibilities between the floor and the adjacent beam.
- The floor units had short seating (20 mm) and no hairpin bars in the cores.
- They were fixed to the beam ledge with an adhesive grout.
- The hollow-core units were pre-split at the ends of the webs.

One of the key differences between the hollow-core floors that had survived the Northridge earthquake, and the Matthews Test, was the North American practice of seating precast hollow-core slabs on Korolath bearing strips (a two-inch wide plastic strip, with one side smooth and the other side rough) and ensuring all floor units had a full 50 mm of bearing with the ability to slide.

Further testing at the University of Canterbury has confirmed the importance of the length of support and the use of a slip-layer under the hollow-core slabs to be critical factors.

A test at the University of Canterbury in mid-2003, confirmed what Engstrom's Swedish testing had already determined in 1992: that over-reinforcing the cores will cause web splitting when the floor is subject to significant support rotation.

As a result of concerns about the Matthews test, two further 3-dimensional tests were performed. [Lindsay 2003] [McPherson 2004]. These tested alternative design details at the supports and showed much improved capability to cope with the displacements imposed up to an equivalent inter-storey drift of more than 4%. This prompted the inclusion of these design details in the Commentary to the Concrete Structures Standard – see below.

3.11.4 Industry response to the Matthews Test

Immediately following the failure of the soffit of the precast floor in the Matthews Test, a Technical Advisory Group (TAG) was formed. This Group comprised structural engineers representing the Earthquake Society, Structural Engineering Society, Concrete Society, Association of Consulting Engineers NZ (ACENZ), and The Contractor's Federation.

The brief of this group was:

- to assess the risk of similar failures occurring in existing buildings
- to determine how building practice could be improved to ensure that the structural integrity of future building could be enhanced

- to communicate those findings to building professionals.

The outcomes from the TAG were:

- development of details to overcome the performance issues evident from the Matthews Test
- research and further testing to confirm their ability to accommodate 4% lateral drift and beam elongation in a ductile frame structure
- an amendment to the Concrete Structures Standard, NZS 3101, containing:
  - two "isolation details" designed to protect the relatively brittle hollow-core units from high ductility demands.
  - a "tied detail" to connect the hollow-core units to the structural frame in a manner that limited the ductility demand on the slabs

  Note: Amendment 2 to NZS3101:2006 issued in August 2008 removed one of the details, leaving only the tied one which is shown in Figure C18.4 of the Commentary.
  - a minimum seating requirement of 75 mm for hollow-core units, in line with international practice
- a series of national seminars were run by the New Zealand Concrete Society, to inform designers
- a general agreement was reached that very few existing buildings were at risk, and that these should be assessed individually as the need arose (change of use or refitting, due diligence for changing ownership, etc).

The Building Industry Authority (later to become the Department of Building and Housing) also commissioned studies of existing buildings containing precast hollow-core floor slabs in each of the three main commercial centres (Christchurch, Wellington and Auckland) to assess the level of risk to existing buildings. These studies showed that a most buildings containing hollow-core floors were unlikely to be subject to significant earthquake-induced displacement. However, there were concerns regarding the performance of hollow-core floors in earthquake in more flexible buildings, particularly ductile frame buildings.

In its Hollow-core Floor Overview Report, [DBH 2005] the Department recommended that territorial authorities require a report from a qualified structural engineer when buildings with hollow-core floors are subject to significant alteration. They also identified some specific buildings for which further investigations were recommended, and urged building owners with concerns to seek advice from a qualified structural engineer. This highlighted the need for guidance material to assist designers, territorial authorities and building owners.

3.12 References

Akesson M, 1993. *Fracture Mechanics Analysis of the Transmission Zone in Prestressed Hollow-core Slabs*. Chalmers University of Technology, Gothenburg, Sweden.

Blades PS, Jacks DH, Beattie GJ, 1990. *Investigation of the Influence of the End Support Condition on the Shear Strength of Prestressed Voided Slabs*. Works Consultancy Services Central Laboratories Report 90-25115. August.

Department of Building and Housing, 2005. *Hollowcore Floor Overview Report*. DBH publication, ISBN0-478-00000-0. www.dbh.govt.nz

Ensgtrom B, 1992. PhD thesis. Sweden.

Gray Book, August 1991 and revised December 1999. *Guidelines for the Use of Structural Precast Concrete in Buildings*. NZ Concrete Society, NZ Society for Earthquake Engineering and the Centre for Advanced Engineering, CAE the University of Canterbury.

Grzybowski M, Wesstergberg B, 1991. *Prestressed Concrete Hollow Core Slabs Subjected to Negative Moments*. Royal Institute of Technology, Stockholm, Sweden.

Lindsay R, 2004. *Experiments on the Seismic Performance of Hollow-core Floor Systems in Precast Concrete Buildings*. ME thesis, Civil Engineering, University of Canterbury.

MacPherson C, 2005. *Seismic Performance and Forensic Analysis of Precast Concrete Hollow-core Floor Super-assemblage*. ME thesis, Civil Engineering, University of Canterbury.

Mejia-McMaster JC, Park R, 1992. *Precast Concrete Hollow Core Floor Unit Support and Continuity. Research Report 94?4*. Department of Civil Engineering, University of Canterbury.

Appendix 3A: Current New Zealand production

New Zealand manufacturers

Over the 40 years hollow-core has been produced in New Zealand, there have been a number of different manufacturers and changes of ownership of various plants. Production of hollow-core requires a relatively high capital investment and a large area of suitable flat industrial land and preferably to be located close to a major market to minimise transport costs.

The following table is indicative only with approximate dates.

Table 3.4: Hollow-core Floor Production in New Zealand – Outline History

Dates of operation	Location	Original operator	Further detail
Auckland region			
1974–1984	Onehunga	B & B	Purchased by Stresscrete in 1976 and operation later transferred to Lunn Avenue. Dycore extrusion machine.
1984–1994	Lunn Avenue	Stresscrete	Operation transferred to Papakura. Dycore, Partek, Elematic and similar extrusion machines.
1986–present	Papakura	GH Concrete	GH Concrete was owned by Mainzeal and Readymix Concrete. Purchased by Stresscrete who transferred their Auckland production to this site in 1994. Ownership changed to Russell Group/Paul Cane July 2007 but Stresscrete name retained. Dycore, Partek, Elematic and similar extrusion machines.
1984–1987	Puhinui	Angus	Closed down and plant shipped overseas. Dycore extrusion machine.
1995–present	Ranui	Stahlton	Ownership changed to Fulton Hogan 2001. Slideformer machines, Roth to 2003 then Echo slideformer.
Wellington region			
Early 1970s–present	Main Highway, Otaki	Stresscrete	Sold to Precision Precast in 1978. Repurchased by Stresscrete in 1997. Ownership changed to Russell Group/Paul Cane July 2007 but Stresscrete name retained. Dycore, Partek, Elematic and similar extrusion machines.
1987–present	Riverbank Road, Otaki	Precast Components	Purchased by Fulton Hogan March 2007 and operated under Stahlton brand. Has always operated Spiroll extrusion machines.
1989–1998	Porirua	Stresscrete	Closed down and transferred to Otaki. Dycore or similar extrusion machines.
1987–1995	Masefield Street, Upper Hutt	Precast Systems	Plant transferred to Stahlton Auckland. Roth slideformer machine.
Christchurch region			

Dates of operation	Location	Original operator	Further detail
1987–2000	Wigram	Precision Precast	Stresscrete purchased Precision January 1997 and traded as Stresscrete. Relocated to Waterloo Road in 2000. Dycore or similar extrusion machines.
2000–present	Waterloo Road	Stresscrete	Purchased by Fulton Hogan 2007 and operated under Stahlton brand. Dycore, Elematic or similar extrusion machines.

During the last 40 years machines have evolved, concrete technology has improved, and New Zealand manufacturers have changed machines, processes, and concrete profiles to varying degrees. Additionally there have been changes to the overseas manufacturers of the machines with takeovers and rebranding.

As at the beginning of 2009, there are only two manufacturers of machine cast hollow-core units in New Zealand.

Fulton Hogan operate the following plants under the Stahlton Brand:

- Ranui, Auckland, operating Echo slideformer machines
- Riverbank Road, Otaki, operating Spiroll extrusion machines
- Christchurch, operating Elematic type extrusion machines.

Each Fulton Hogan / Stahlton plant was purchased as a going concern from other operators and each operates different machines producing different profiles. Refer to the appendix.

Stresscrete branded plants as follows:

- Papakura, Auckland, operating extrusion machines.
- Main highway, Otaki, operating extrusion machines.

Appendix 3B: Hollow-core profiles

This Appendix is under preparation as at April 2009.

The intention is to provide an aid to designers to help choose the most appropriate hollow-core unit, and to help those involved in assessment and/or retrofit to identify the units in place.

The permission of the manufacturers to include these details is gratefully acknowledged.

3B.1 Stahlton profiles

The following profiles are current (2009) production at Stahlton plants. C series is produced at the Ranui Auckland plant using Echo slideformer machines, E series is produced at the Christchurch plant using Elematic extrusion machines, and S series is produced at the Otaki plant using Spirol extrusion machines.

All dimensions are nominal and may vary due to concrete slump and former wear.

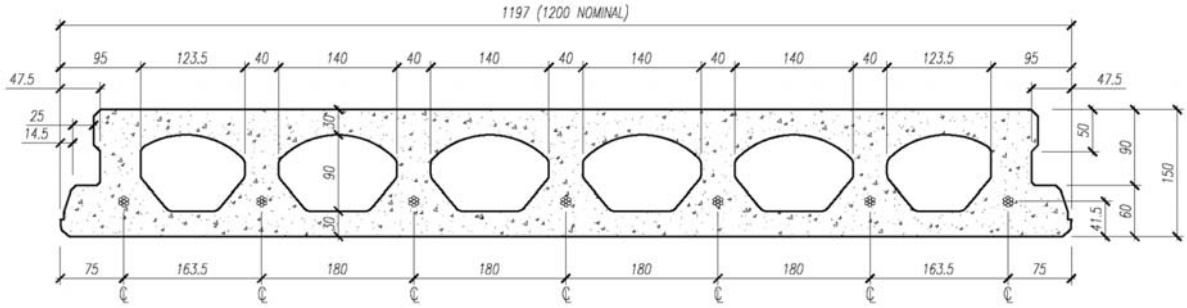

150 ECHO SLAB

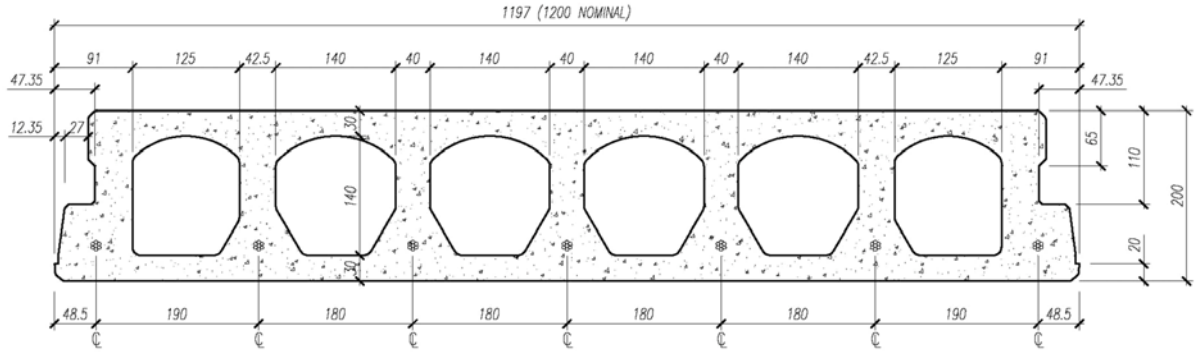

200 ECHO SLAB

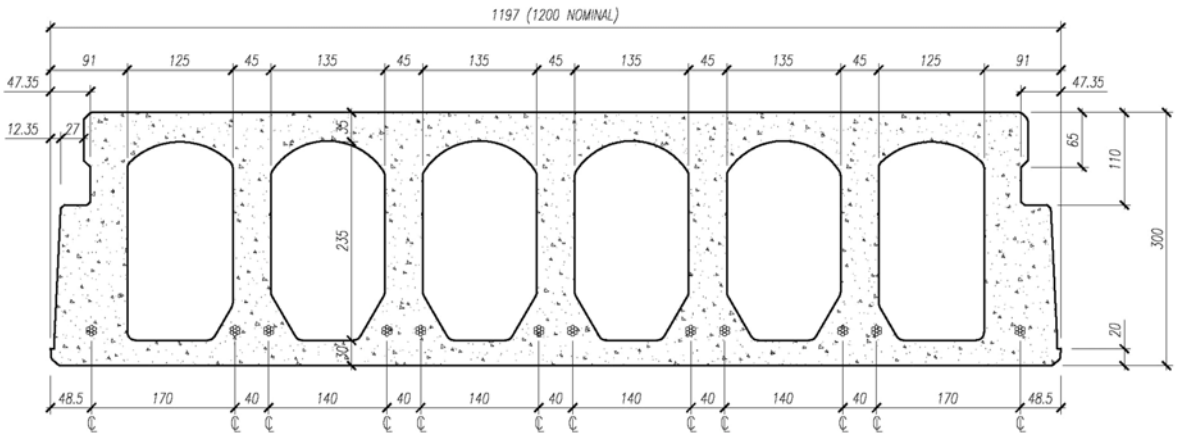

300 ECHO SLAB

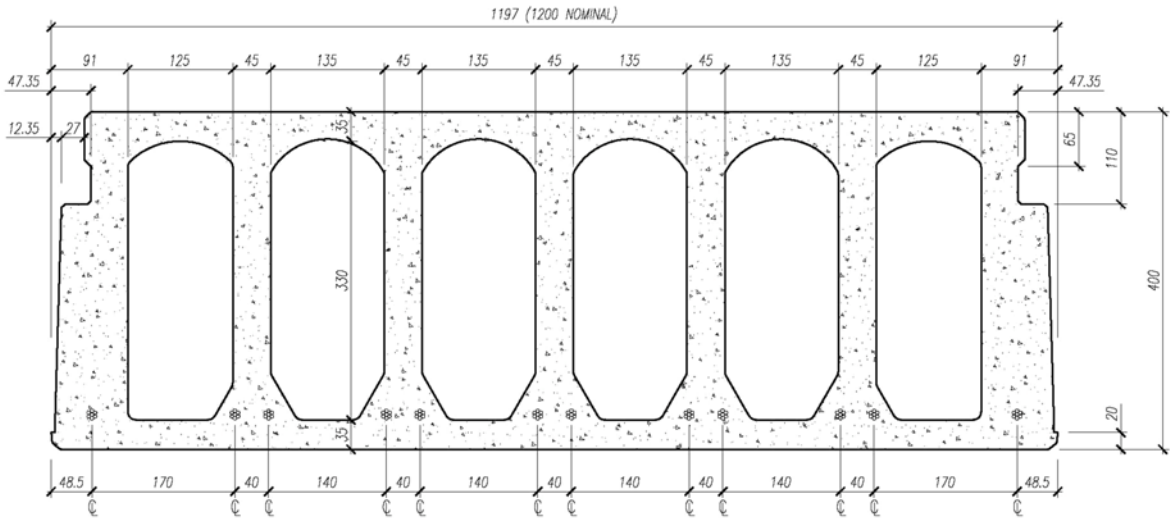

400 ECHO SLAB

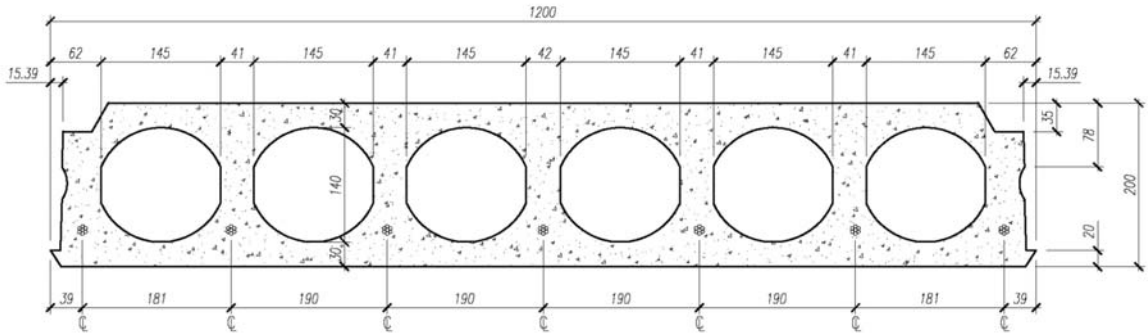

200 ELEMATIC SLAB

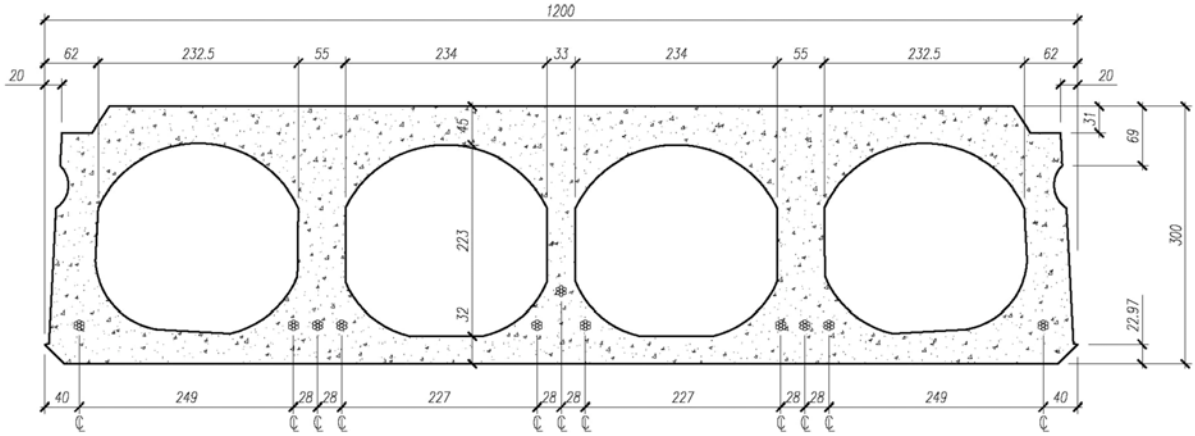

300 ELEMATIC SLAB

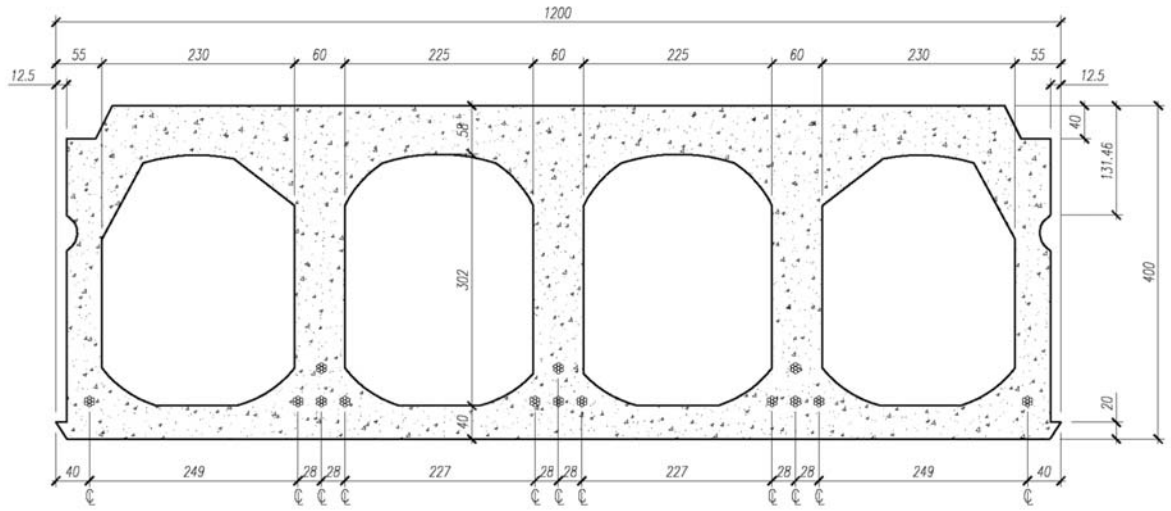

400 ELEMATIC SLAB

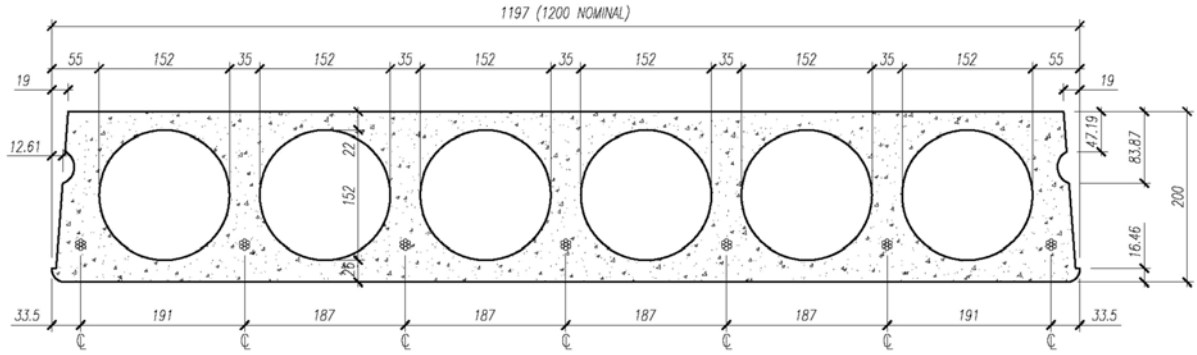

200 SPIROLL SLAB

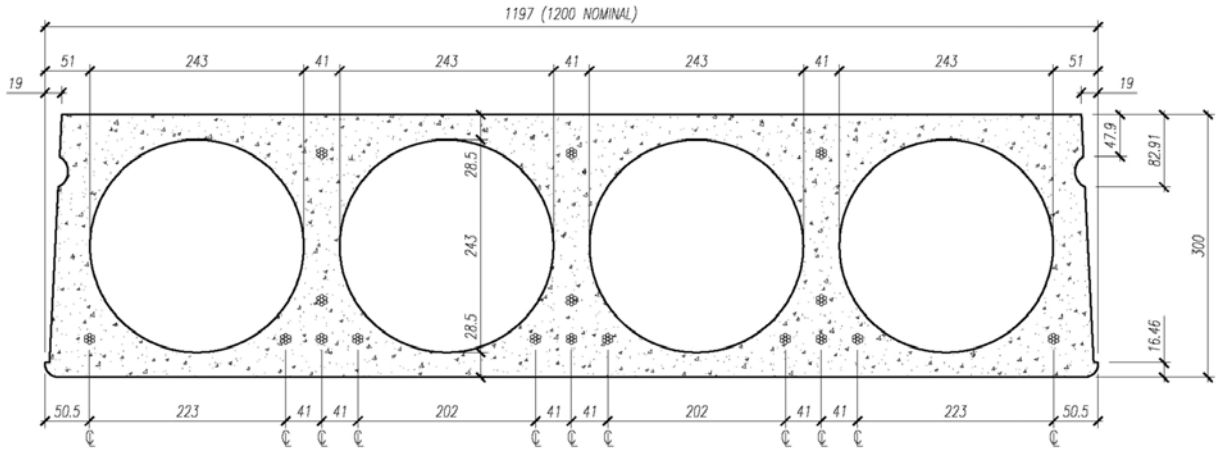

300 SPIROLL SLAB

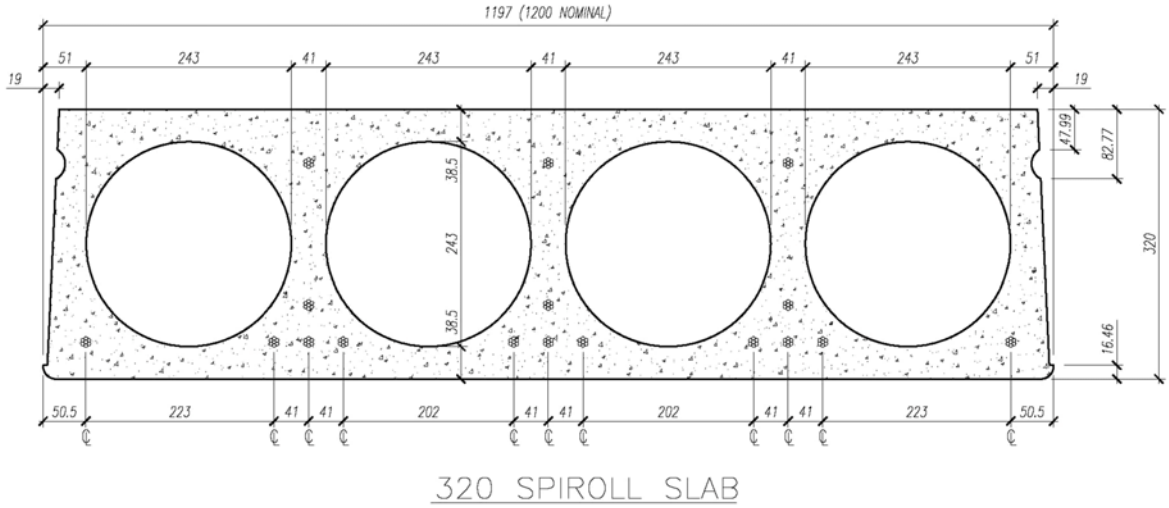
1197 (1200 NOMINAL)
51
243
41
243
41
243
41
243
51
19
19
47.99
82.77
320
16.46
38.5
243
38.5
50.5
223
41
41
202
41
41
202
41
41
223
50.5
320 SPIROLL SLAB

3B.2 Stresscrete profiles

Figure 3B.1: Early extruded Dycore slabs and wet cast UF hollow-core slabs produced by Stresscrete

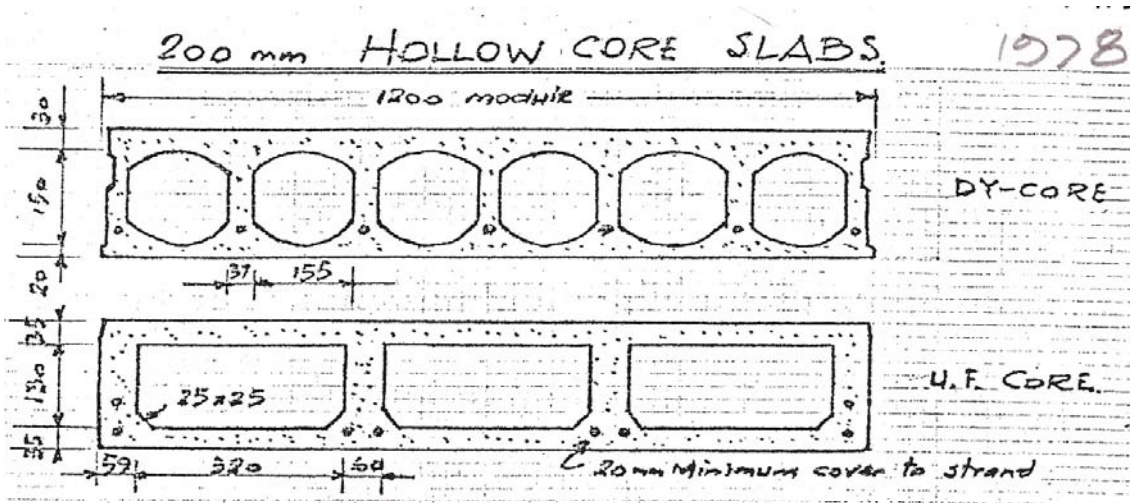

Section Properties:

Section	Topping (mm)	Weight (kN/m)	Mass (kg/m)	Area 10^{-2} m^2	y_b mm	I 10^{-4} mm^4	Z_t 10^{-3} mm^3	Z_b 10^{-3} mm^3
200 DY-CORE	None	2.96	302	11.84	104	6.15	6.41	5.91
	60	4.76	486	-	141	11.36	9.97	8.41
200 UF CORE	None	2.92	298	11.67	99	6.289	6.23	6.35
	60	4.72	482	-	138	12.42	10.18	9.00

Concrete Data assumed:

Precast Concrete strength 42 MPa
Topping " " 20 MPa
Concrete Density 25 kN/m³ , 2550 kg/m³

Figure 3B.2: Stresscrete 200 series Dycore

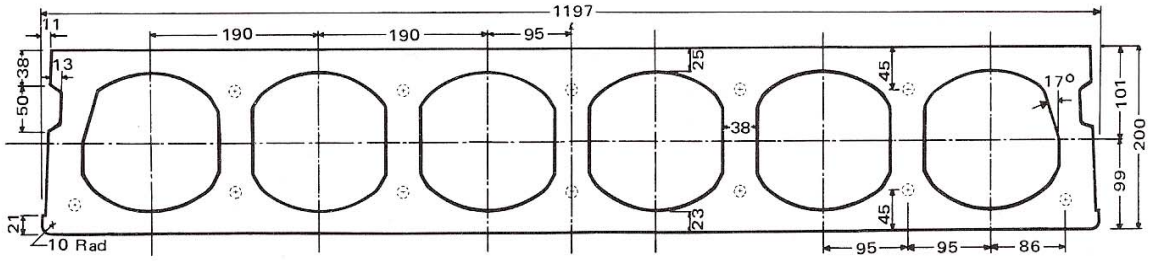

Unit	Area (m^2)	Yb (mm)	I (m^4)	Self weight (kPa)
300 Dycore/Partek	0.1192	100	6.5×10^{-4}	2.20

Figure 3B.3: Stresscrete 300 series Dycore

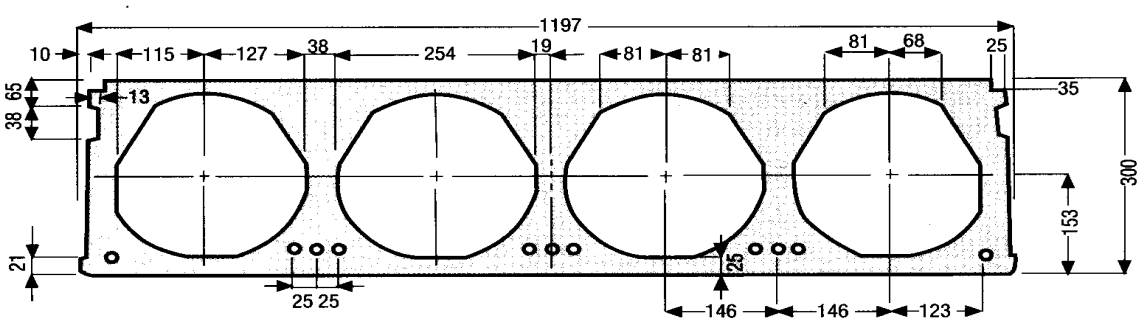

Unit	Area (m^2)	Yb (mm)	I (m^4)	Self weight (kPa)
300 Dycore/Partek	0.1606	153	2.04×10^{-3}	3.20

Figure 3B.4: Stresscrete cross-sections

Produced by Auckland and Otaki plants up to present and by Stresscrete Christchurch plant up to 2007 which was purchased by Fulton Hogan in 2007 and then operated as Stahlton

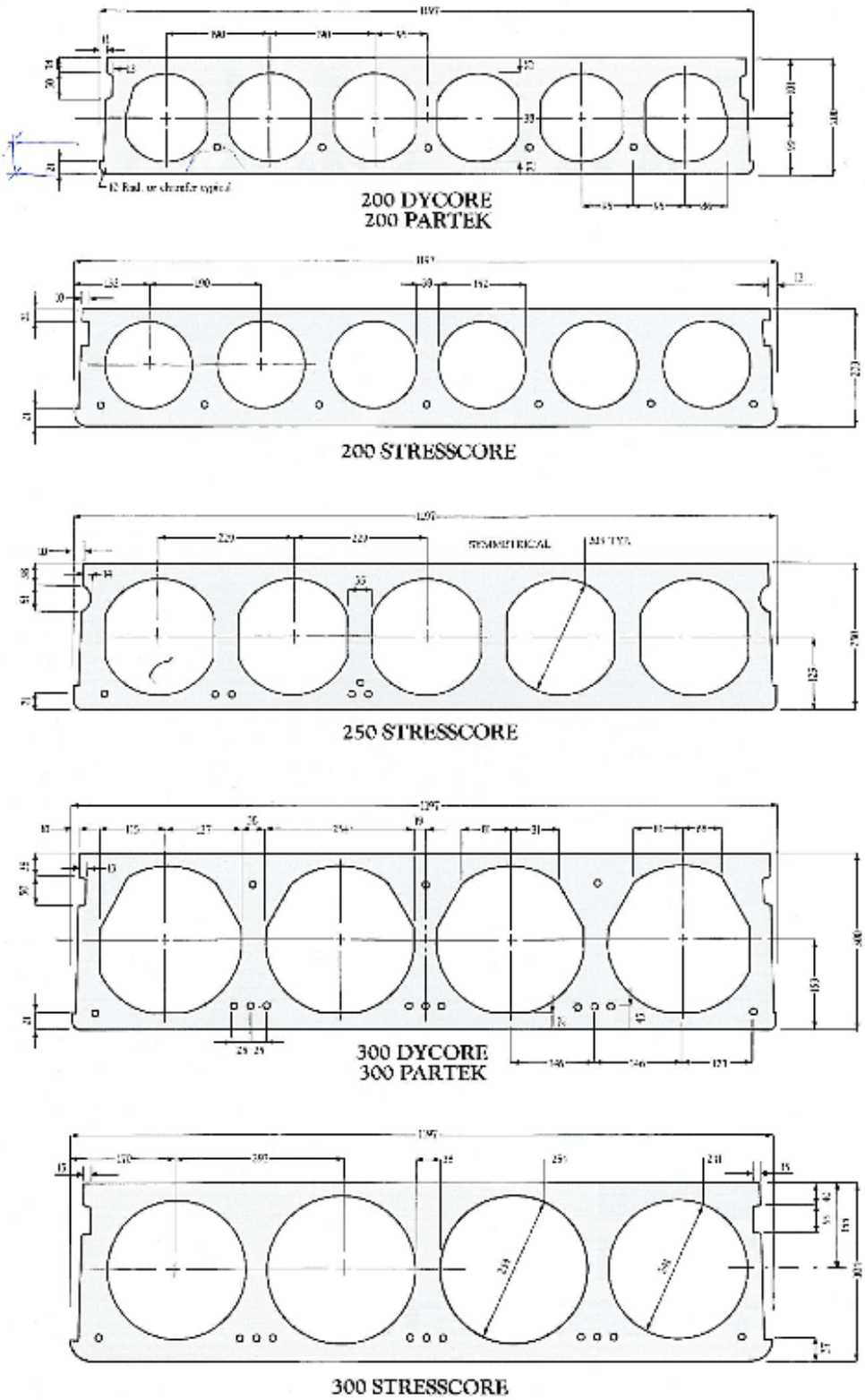

3B.3 Spiroll profiles

Produced by Precast Components Otaki plant from 1987 and from the same plant under Fulton Hogan ownership operating as Stahlton from 2007.

200 SERIES SPIROLL

SECTION DESIGN PROPERTIES (mm UNITS) PER 1200 MODULE

	A mm²	Yb mm	Yt mm	Ixx 10^6 mm⁴	Zb 10^6 mm³	Zt 10^6 mm³	TOPPING STRENGTH MPa	SELF WEIGHT KPa	HANDLING MASS Kg/m
BARE SLAB	126125	98	102	625	6.363	6.147		2.57	320
WITH 65 mm TOPPING	180130	139	127	1326	9.570	10.480	20	4.10	

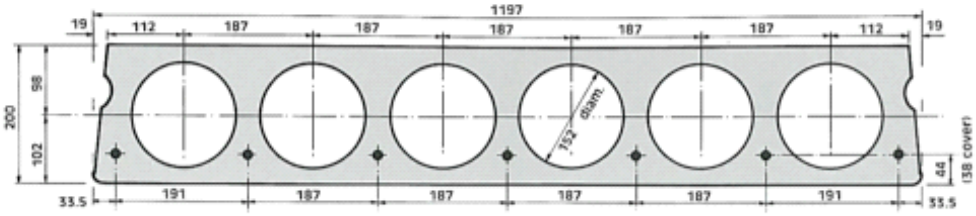

300 SERIES SPIROLL

SECTION DESIGN PROPERTIES (mm UNITS) PER 1200 MODULE

	A mm²	Yb mm	Yt mm	Ixx 10^6 mm⁴	Zb 10^6 mm³	Zt 10^6 mm³	TOPPING STRENGTH MPa	SELF WEIGHT KPa	HANDLING MASS Kg/m
BARE SLAB	166992	150	150	1959	13.061	13.061		3.42	420
WITH 65 mm TOPPING	227372	199	167	3457	17.421	20.760	25	4.95	

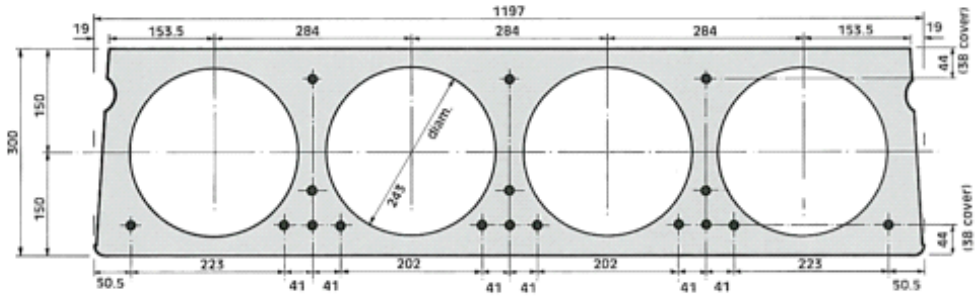

320 SERIES SPIROLL

SECTION DESIGN PROPERTIES (mm UNITS) PER 1200 MODULE

	A mm²	Yb mm	Yt mm	Ixx 10^6 mm⁴	Zb 10^6 mm³	Zt 10^6 mm³	TOPPING STRENGTH MPa	SELF WEIGHT KPa	HANDLING MASS Kg/m
BARE SLAB	190492	160	160	2524	15.774	15.774		3.90	480
WITH 65 mm TOPPING	250872	206	179	4244	20.569	23.754	25	5.43	

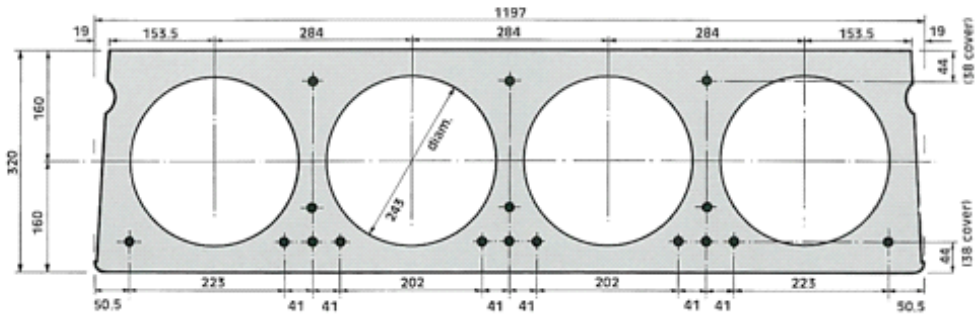

4 Performance expectations

4.1 Building Act and Building Code requirements

The purpose of the Building Act is to enable people who use buildings to do so at an acceptable level of risk and also to ensure that the risk of damage is appropriate. The New Zealand Building Code elaborates on this principle and in particular Clause B1 defines two high level performance objectives that are applicable for building elements such as hollow-core. These objectives can be recast specifically in terms of hollow-core namely that hollow-core floor systems shall:

- have a low probability of rupturing , becoming unstable, losing equilibrium, or collapsing during construction or alteration and throughout their lives, and
- have a low probability of causing loss of amenity through undue deformation, vibratory response, degradation, or other physical characteristics throughout their lives, or during construction or alteration when the building is in use.

The New Zealand Building Code requires that account shall be taken of all physical conditions likely to affect the stability of hollow-core systems. It lists a number of conditions of which the following are applicable for hollow-core floors in buildings:

- self weight
- imposed gravity loads arising from use
- temperature
- earthquake
- snow
- fire
- differential movement
- influence of equipment, services, non structural elements and contents
- time dependent effects including creep and shrinkage, and
- removal of support.

The list is not exhaustive but includes the effects likely to be critical for hollow-core floors systems.

The Building Code also requires that due allowance be made for consequences of failure, the intended use of the building, effects of uncertainties resulting from construction activities, variation in the properties of materials, and accuracy limitations inherent in the methods used to predict the stability of buildings.

For building elements these performance objectives are typically deemed to be satisfied if the element satisfies the requirements for the Ultimate and Serviceability Limit States set out in the New Zealand Loadings Standard and the appropriate companion materials Standards. For hollow-core systems these Standards will be AS/NZS 1170 and NZS 3101.

These guidelines primarily address the performance of hollow-core floor systems in earthquakes but, in terms of the list of conditions above, it will be clear that aspects such as construction tolerances, differential movements and creep and shrinkage, and how these impact on the support of the floor system will be inextricably linked to seismic performance of a precast system such as hollow-core.

4.2 Tolerable impacts

When considering what might be acceptable performance for a building system in it is useful to consider the impacts that would be tolerable under increasing severity of loading.

Figure 4.1 provides tolerable impacts for buildings under various levels of earthquake described in terms of the likelihood of the earthquake shaking. The lower the likelihood, the more severe the shaking. This figure was developed during a review of the Building Code by the structural review group. It currently has no official status but it does represent a view on tolerable impacts that is consistent with the objectives in the Building Code.

Figure 4.1: Tolerable impacts for buildings under various levels of earthquake

Earthquake event definition (indicative annual probability)	Performance matrix – structural					Earthquake intensity factor from AS/NZS 1170 (for reference purposes only)
	Chances of event occurring in lifetime of building	Performance group				
		1	2	3	4	
>1/2500	Extremely low		Tolerable impact Level 6 (extreme)	Tolerable impact Level 5 (very severe)	Tolerable impact Level 5 (very severe)	>1.8
1/1000	Very low	Tolerable impact Level 6 (extreme)	Tolerable impact Level 5 (very severe)	Tolerable impact Level 4 (severe)	Tolerable impact Level 4 (severe)	1.3
1/500	Low	Tolerable impact Level 5 (very severe)	Tolerable impact Level 4 (severe)	Tolerable impact Level 3 (high)	Tolerable impact Level 2 (moderate)	1.0
1/100	Medium	Tolerable impact Level 4 (severe)	Tolerable impact Level 3 (high)	Tolerable impact Level 2 (moderate)	Tolerable impact Level 1 (mild)	0.5
1/25	High	Tolerable impact Level 2 (moderate)	Tolerable impact Level 1 (mild)	Tolerable impact Level 1 (mild)	Tolerable impact Level 1 (mild)	0.3
Every day	Very high	Tolerable impact Level 0 (insignificant)	Tolerable impact Level 0 (insignificant)	Tolerable impact Level 0 (insignificant)	Tolerable impact Level 0 (insignificant)	0.0

Key to tolerable impact levels (TIL)	**TIL 0 Insignificant**	**TIL 1 Mild**	**TIL 2 Moderate**	**TIL 3 High**	**TIL 4 Severe**	**TIL 5 Very severe**	**TIL 6 Extreme**
	No significant effects on building elements, occupants or functions	Building function maintained. Little or no damage to structure. Minor damage to building fabric. Some contents affected. Building fully accessible and safe to occupy.	Building function affected for less than one hour. Minor damage to structure. Moderate damage to building fabric. Contents affected. Building accessible and safe to occupy.	Building function affected for up to seven days. Moderate but repairable damage to structure. Damage to building fabric requires replacement of some items. Most contents affected. Access inhibited. Most buildings safe to occupy after clearance by authorities.	Building unsafe to occupy for up to one year. Major damage to structure and building fabric, but capable of repair. Most contents seriously affected. Building function extensively affected. Unassisted evacuation possible.	Building unsafe to occupy for one year or more. Major and extensive damage to structure and building fabric. Not repairable. Contents not salvageable. Access denied for an indefinite period. Building function ceases.	Building collapse
Track of key objectives	**Insignificant**	**Mild**	**Moderate**	**High**	**Severe**	**Very severe**	**Extreme**
Structural integrity	Fully maintained	Fully maintained	Maintained	Maintained except for minor areas	Not maintained for significant parts	Not maintained for most parts	Gone
Stability	Fully maintained	Fully maintained	Maintained	Maintained except for minor areas	Not maintained for significant parts	Not maintained for most parts	Gone
Support	Fully maintained	Fully maintained	Maintained	Maintained except for minor areas	Not maintained for significant parts	Not maintained for most parts	Gone
Progressive collapse	None	None	None	Unlikely	Possible	Extensive	Complete
Damage/loss of amenity	None	Not significant	None	Moderate	Significant	Extensive	Total
Damage to other properties	None	None	Possible	Likely	Moderate	Significant	Extensive

This figure also tracks key issues against key objectives to provide further reference for the descriptions of tolerable impacts.

A continuum of potential impacts, consistent with the impact levels for buildings, can be defined for hollow-core floor systems. These are presented in Table 4.1 for the Building Impact Levels 0 to 6 shown in Figure 4.1.

Table 4.1: Impact levels for hollow-core floor systems

	Impact levels						
	0 Insignificant	**1 Mild**	**2 Moderate**	**3 High**	**4 Severe**	**5 Very severe**	**6 Extreme**
Description	Very minor spalling at precast unit seats. Very fine and minor cracking. Repair not considered necessary.	Mild spalling at precast unit seats. Repair not considered necessary.	Moderate spalling at precast unit seats. No differential movement between precast units and supporting or adjacent structure. Minor cracks expected in the floor topping. Minor repairs required.	Spalling at precast unit seatings and some (ie, <10 mm) differential movement between the precast units and supporting and adjacent structure. No apparent loss of integrity of the precast units, loss of attachment of the floor topping to the precast units or of the floor system to the primary supporting structure. Cracks in the floor system expected. Repairs required.	Significant spalling of precast unit seatings and significant differential movement (< 40mm) between some precast units and supporting structure. No loss in integrity of floor system as a whole or in diaphragm action as a whole. Extensive cracking but repairable. Extensive repairs required before reoccupation.	Up to 15% of precast units lose seating. Up to 5% of precast units may collapse. Loss in integrity between topping and precast units in some areas. Diaphragm largely intact but severely damaged. Floor may not be repairable.	Complete floor collapse

The tolerable impacts applicable to hollow-core systems are determined from Table 4.1 using the tolerable impact level from Figure 4.1 which corresponds to the building importance and chance of event occurring. For example, for a 1 in 500 year event and a building of importance level 2, the TIL from Figure 4.1 is Level 3 (High). This means that, for this situation, the impacts shown in the Level 3 column of Table 4.1 may be regarded as tolerable.

4.3 Verification

Verification of compliance with all of the performance objectives discussed in 4.2 above would be prohibitive and for the majority of building designers the description of the expected performance of hollow-core systems outlined in the sections above will be of little practical interest. To get over this difficulty design standards require verification of performance at two codified limit states; serviceability limit state (SLS) and the ultimate limit state (ULS). The codified provisions of these two limit states are set to provide confidence that the performance of the system, across the continuum of potential demands, and the overall risk are acceptable.

In this section the steps required to show compliance are described.

4.3.1 Demonstrating compliance

Compliance is achieved if capacity exceeds demand by the required margin.

4.3.1.1 Demand

The demands on hollow-core systems will be characterised in terms of actions within the hollow-core (ie, shear, flexure, torsion, axial compressions, axial tensions) imposed deformations, particularly on the supports (ie, rotations, differential displacements between the hollow-core unit and supporting structure) and the effects of construction tolerances.

In many cases building drift may be an indicator of demand but designers should be aware that lateral drift on its own will not fully define demands.

A discussion on the assessment of demands is given in section 6.3 for new construction and section 7.2 for existing buildings.

4.3.1.2 Capacity

Capacity can be determined from testing or from calculation.

4.3.1.3 Testing

General principles for determining the capacity of a hollow-core floor system by testing are outlined in Appendix B AS/NZS 1170.0. The testing rig, arrangement and programme shall be sufficient to test all aspects relevant for the building for which the test results are to be relied on. These will include but not necessarily be restricted to:

- building drift
- inelastic effects in the primary structure (eg, beam elongation)
- expected distortions in the primary structure (eg, rotation of supports, differential distortions between floor and primary structure)
- building tolerances
- manufacturing variances.

4.3.1.4 Calculation

Capacity can also be determined by calculation provided all failure mechanisms are identified and appropriately dealt with. Designers can assume that the capacity has been adequately determined by calculation if the requirements of NZS 3101 and these guidelines are followed. These steps are set out in detail in the following sections.

5 Key considerations in hollow-core floor performance

5.1 Summary of critical issues for structural performance

There is a wide range of variables that can affect the structural performance of hollow-core floors. Because of the discontinuities involved in precast concrete, details of the end supports are critical. Small changes from accepted practice can result in major reductions in load-carrying capacity. Reduction of capacity is mostly due to the displacements induced in the floor elements by earthquake ground motions.

Inter-storey drifts are just the start. The impact on the floor system of inter-storey drifts is highly dependent on the particular context and details of the floor units and topping. A small overall inter-storey displacement can cause disproportionately large local strains in floor units.

For ductile frames, beam elongation due to plastic hinge formation must be considered. Once again, a relatively small elongation can have a disproportionate effect on the unit or on the topping.

Loads, including vertical seismic loads, make up the other part of the demand side.

With a range of floor details involved, the induced displacements and the induced or applied loads, the overall effect on safety and structural capacity can be difficult to determine, and at times seem impossible.

The approach taken in this document is to examine closely the various aspects of floor system behaviour and the influence on the structural performance of the floor. In other words, to look at potential failure mechanisms and see what steps are needed to make failure a tolerably low probability.

In the following section this has been outlined by considering the role of the floor to have adequate end support, maintain its integrity to act as a slab, retain stiffness and strength capability to act as a diaphragm and to provide restraint to main structural members.

Consideration must be given to:

- beam strength enhancement
- cut-outs and penetrations
- vertical seismic load
- tensile strength of concrete
- critical dimensions of hollow-core units
- earthquake-induced displacements (deflections, rotations, twists).

Hollow-core flooring units have been designed to resist gravity loading conditions and for these actions, the units appear to have adequate strength. However, for conditions (displacement and induced forces) that may arise in an earthquake there are a number of potential brittle failure modes. To provide protection against these, a "capacity design" approach should be followed in a design, or in planning a retrofit. Typically the supports of the hollow-core units are designed and detailed to act as ductile fuses, which limit the actions and displacements that can be transmitted to the units to safe levels. In addition, in some cases it is necessary to introduce ductile linking elements to prevent high forces being transmitted between a hollow-core unit and other structural elements. Refer Figure 5.1.

Figure 5.1: Ductile detailing of supports and linking elements

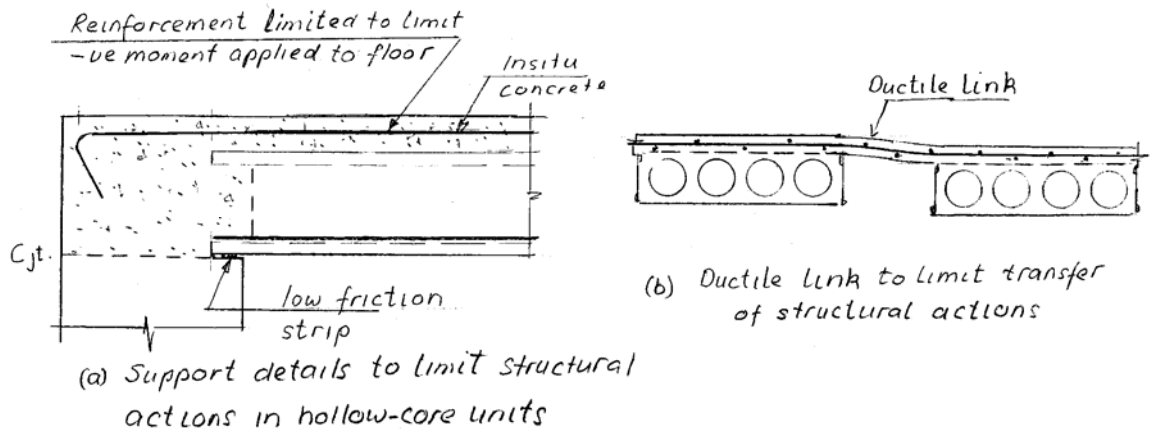

It should be noted that brittle failure modes of hollow-core units occur predominantly as a result of either:

- local displacements between adjacent hollow-core units or between a hollow-core unit and an adjacent structural element, or
- structural actions induced into the hollow-core unit and its insitu concrete topping.

Global displacements of the building are of significance only if they can be related to local displacements, which are the cause of damage to hollow-core units. In any design, or retrofit, it is essential to assess the magnitude the local displacements and actions which may be induced in an earthquake. In summary, to assess the potential seismic performance it is essential to consider all the potential failure modes. Performance cannot be assessed from the projected inter-storey drift alone, though it is a useful broad measure.

The different forms of failure, which may occur in an earthquake, are briefly noted below. In subsequent sections these are described in greater detail together with methods of assessing the strength and/or deformation levels which may be expected to cause failure.

In relation to the four main roles of the slab, the following are key considerations.

5.1.1 End support

Consider the following mechanisms that could result in loss of end support:

- The width of supporting ledge may be insufficient to support the floor; consideration needs to be given to construction tolerances, edge distance, minimum bearing, likely beam elongation, relative rotation and spalling of cover concrete.

5.1.2 Slab action

Consider the following mechanisms that could affect slab action:

- Positive moment failure close to the face of the support, including dowel / prying action of the concrete plug cast into the ends of the units.
- Negative moment failure at the end or close to the end of started bars in the topping concrete or reinforcement infilled cores if these are present:
  - Allowance for vertical seismic loads is made.
- Web splitting due to vertical shear transfer or differential displacements.
- Torsional failure due to twist applied to hollow-core units due to deformed shape or displacement of supporting or adjacent structure.
- Diagonal tension failure of un-reinforced webs in negative moment zones.

5.1.3 Diaphragm action

Consider the following mechanisms that could affect diaphragm capability:

- Overstressing of the floor system when subjected to displacements from the main structural elements to which the floor is connected (beams, columns, walls, steel bracing).
- Failure of the linking slab between the main beam and adjacent hollow-core unit due to differential elongation, vertical displacements and shear transfer.
- Failure / lack of ductility of topping reinforcement.
- Loss of compressive stress load paths due to localised damage resulting from significant cracks forming in the diaphragms.

5.1.4 Structure restraint

- Failure / lack of ductility of topping reinforcement.
- Insufficient tie-backs to columns to achieve stability.

5.1.5 Other considerations

- Allow for the effects of cut-outs or possible on-site modifications.
- Allow for any increase in beam strength due to the contribution of pre-stressed floor units and topping, or from restraint of beam elongation. Beam strength enhancement could change the frame failure mode from a ductile beam sway mechanism to a non-ductile column sway mechanism. This applies to all types of floors containing precast pretensioned floors, and details on strength enhancement are given in 5.2.2.

5.2 Overview of performance issues for hollow-core floors

5.2.1 Introduction

Research has shown that the use of pretensioned precast units in floors can have a number of adverse effects on seismic performance of buildings. Many of these aspects were not understood until recently and consequently many existing buildings contain detailing that is now considered substandard. This section gives and overview of problems involved with the use of precast prestressed floor units in buildings. Section 5.2.2 deals considers the strength increase that can occur due to the interaction of floor slabs containing pretensioned units and reinforcement concrete beams. This problem is associated with beams designed to sustain inelastic deformation in the event of a major earthquake. Section 5.2.3 looks at problems related to the detailing of support of precast floor units and section 5.2.4 gives an overview of potential damage arising from incompatible displacements that may be imposed on hollow-core units by the structure. These displacements can cause damage, or in extreme cases collapse of a floor in a major earthquake.

5.2.2 Strength enhancement of beams

This is an area of active research in 2008. The problems related to strength enhancement of beams due to interaction with floors slabs should be understood in greater depth when current research projects have been completed. Consequently the recommendations given below should be taken as tentative (in 2009).

Research [Fenwick et al 2005; Fenwick et al 2006; Lau 2007] has shown that the level of strength enhancement, due to the presence of pretensioned units in a floor, can be considerably greater than that indicated by over-strength calculations based on editions of the Structural Concrete Standard (NZS 3101) published prior to 2006. In carrying out an assessment for retrofit of existing buildings it is important to assess the significance of the potential increase in strength of beams on seismic performance, as this can potentially change the failure mode and reduce the lateral displacement capacity of the building. For example a chosen ductile beam sway failure mode in capacity design may be replaced by a column sway failure mode, which can lead to premature collapse due to its lower lateral displacement capacity. However, there are other potential failure modes that may arise such as shear failure in beams due to an under-estimate of flexural strength of beams.

Figure 5.2 illustrates a situation where the use of pretensioned units in a floor can result in significant strength enhancement of beams in a ductile moment resisting frame. When a plastic hinge forms, elongation occurs in a reinforced concrete beam. Where the precast units span past plastic hinges, such as those marked A in Figure 5.2(c), elongation is partially restrained by the floor and pretensioned units in the floor. As a result of this restraining action the floor slab sustains a tension force, T_{slab}. This tension force acts with the tension force sustained by the reinforcement in the beam to increase the negative moment flexural strength, see Figure 5.2(a). However, the tension force in the slab, T_{slab}, has little effect on the positive moment flexural strength as its line of action is nearly the same level as the component of compression force that is balancing it. It should be noted that the area of concrete available to resist compression force for the positive moment includes part of the slab adjacent to the beam and consequently the magnitude of the internal level arm for the tension force in the bottom of the beam is not significantly reduced, see Figure 5.2(b). The Structural Concrete Standard, NZS 3101-2006 (see 9.4.1.6.2) gives details of how the flexural

strength over-strength can be assessed when precast prestressed floor units span past an intermediate column where plastic hinges may form on both sides of a column in a major earthquake.

Figure 5.2: Interaction of floor and beam where precast floor units span passed the beam plastic hinges

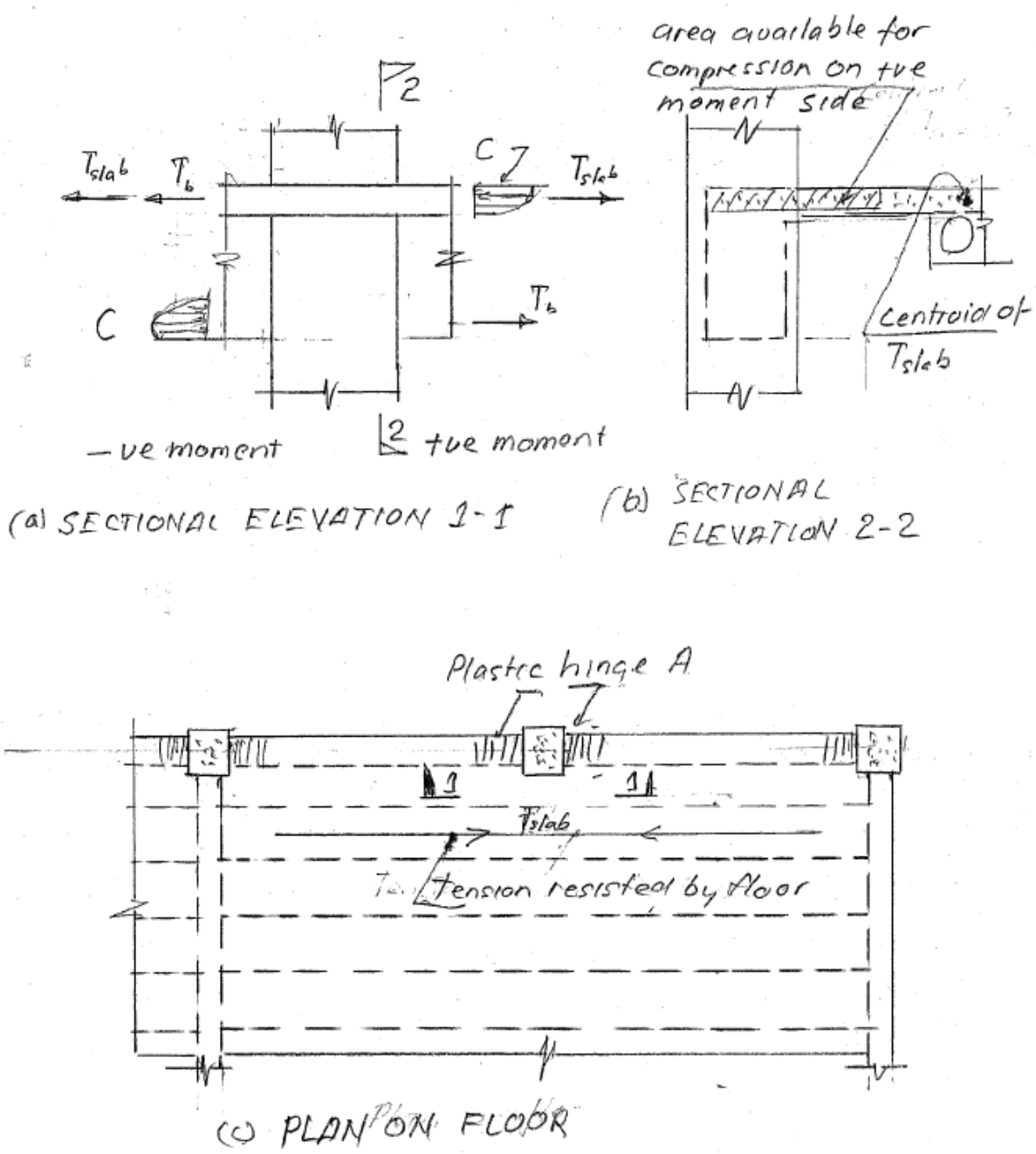

Figure 5.3 illustrates a second situation where precast units in a floor can increase the flexural strength. In this case the pretensioned units are supported on transverse beams which frame into the columns. Consequently the pretensioned units do not span past the plastic hinges. The pretensioned units tie the regions of floor slab between the transverse together so that each of these regions as a strong stiff block. Elongation of the plastic hinges on each side of a column opens up wide cracks close to the column in the slabs immediately adjacent to the supporting beams. This displacement imposes bending and shear forces on the floor blocks, which act in a similar manner to deep beams, as illustrated in Figure 5.3. The case of a perimeter frame with multiple bays is shown in Figure 5.3(b). In this case, in a perimeter frame with multiple bays, the restraining force can build up due to the restraint from more than one deep beam. The restraining tension force, T_{slab}, is in part resisted by reinforcement spanning across the transverse beams and in part transmitted by flexural and shear forces resisted by the deep beam action to a region of the floor located some distance from the perimeter frame. Lau [2007] found that this deep beam action resulted in an increase in strength which was considerably greater than could be accounted by the slab reinforcement spanning the transverse beam that is assumed in the Concrete Structures Standard: NZS 3101 [2006] to contribute to beam over-strength.

At present there is no published method of assessing the potential strength increase due to deep beam action. There have been two recent tests at the University of Canterbury, each of which has looked at the case of a floor supported on three transverse beams. These tests have indicated that this deep beam action in floor slabs can significantly increase the flexural strength of plastic hinges.

The magnitude of the tension force resisted by a floor in both cases described above depends on the magnitude of elongation sustained in the plastic hinges. The theoretical flexural strength of a section (based on measured properties of materials, taken as $1.1M_n$) is typically sustained at a section ductility of the order of 3 to 5. At this level of inelastic deformation only a narrow width of slab contributes to the strength. The peak flexural strength (measured from tests, taken as 1.15 x $1.1M_n$) is sustained at a section ductility which is order of magnitude greater than that corresponding to the theoretical strength and due to the higher inelastic deformation a very much wider width of slab contributed to the strength. For this reason the Concrete Structures Standard, NZS 3101-2006, requires different sections to be used for calculating the design (M_n) and over-strength values (M_o). Test results indicate for ductile moment resisting frames indicate that typically the strength sustained at a curvature ductility of the order of 3 to 5 is approximately 1.15 times the design strength, and the corresponding drift is of the order of 0.6 to 0.8 percent. The peak flexural strength (corresponding approximately to over-strength) is sustained at a displacement of the order of 2.5 to 3 percent drift.

Figure 5.3: Deep beam action in floor slabs

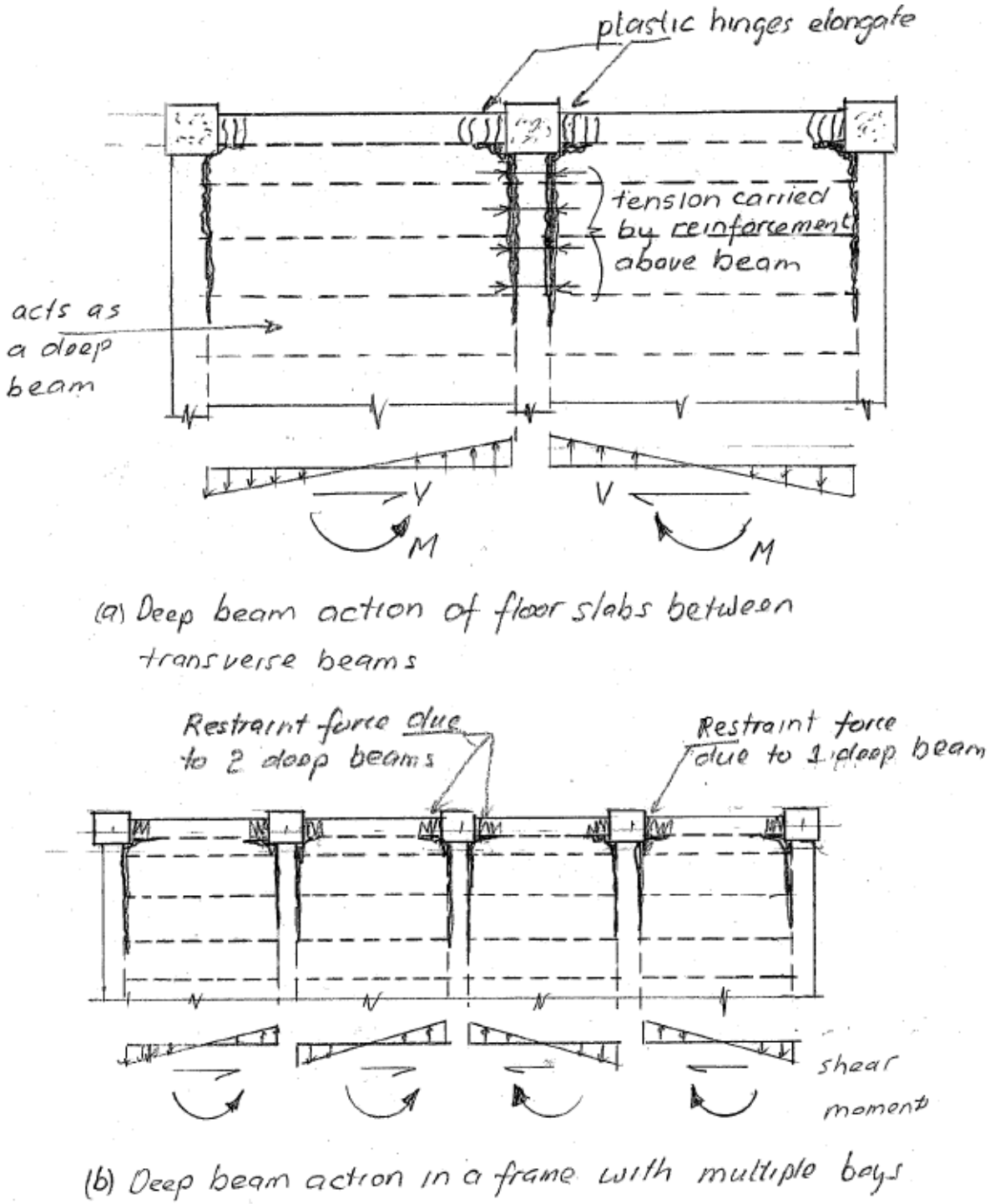

The over-strength moments induced in a column are generally assumed to be limited by the flexural over-strength of the beams framing into it. However, as illustrated in Figure 5.4 this ignores the moment that can be induced in a column as a result of torsion in a transverse beam. This is only likely to be significant in one way frames (where secondary beams, framing in to the main frame, are prevented from forming plastic hinges; such beams are usually in frames which are in line with relatively stiff elements of low interstorey drift, such as walls). In two-way frames, plastic hinges may be expected to develop in the transverse beams, which will greatly reduce their torsional stiffness and strength. The torsional moment contribution of beams is difficult to assess. Design criteria for torsion have been developed from tests on statically determinate members, which are free to elongate when diagonal torsional cracks develop. However, in practice the structure is highly indeterminate and elongation associated with the development of torsional cracking will be at least partially restrained, which increases the torsional moment that can be resisted. Further more design equations assume that torsional cracking will occur when the principal tensile stress reaches 0.33 times the direst tensile strength of concrete. This value approximately corresponds to the lower characteristic strength with the corresponding upper tensile strength being of the order of twice this value. As a tentative recommendation it is suggested the torsional resistance of a transverse beam framing into a column in a one-way frame may be taken as 1.5 times the torsional cracking moment given in NZS 3101 [2006].

Figure 5.4: Contribution of torsion to column moments in columns in one-way frames

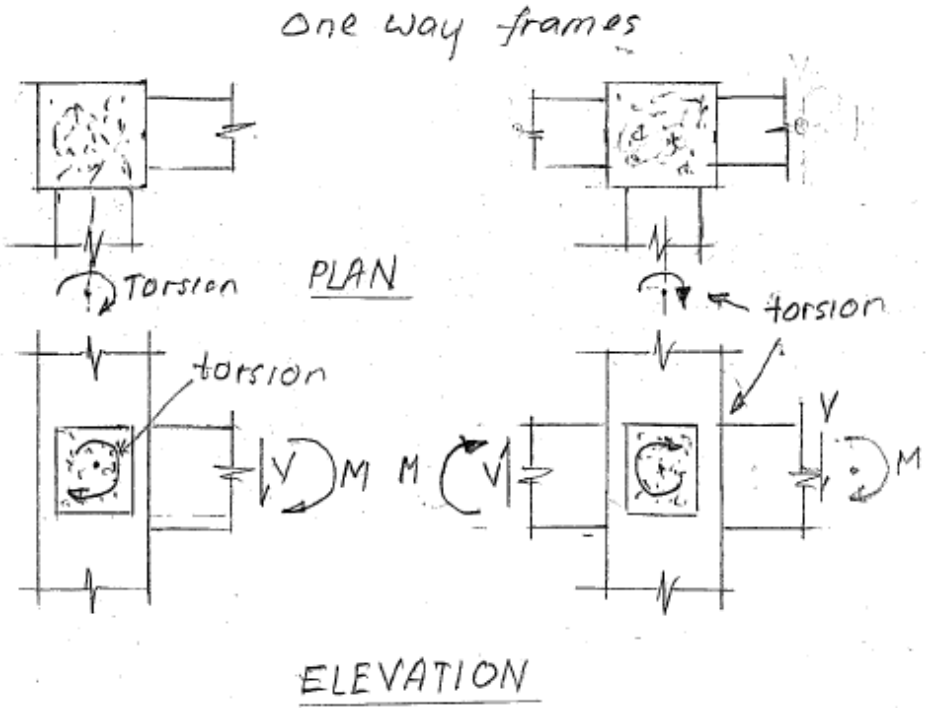

5.2.3 Support details for hollow-core units

In an earthquake as the building sways backwards and forwards the beams supporting precast units will rotate. Floor containing precast units try to oppose this rotation as they are relatively stiff. Beams which run parallel to the precast units may form plastic hinges and consequently elongate, pushing apart the beams supporting the floor and placing the floor in tension. The weakest section for resisting flexure and tension in the floor is either at the supports or close to the supports, and hence this elongation and rotation can result in wide cracks developing either at the support or in the precast unit close to the support.

In assessing any support detail the following actions have to be considered:

- What structural actions can be transmitted to the precast units and can the units sustain these actions without failure?
- Does the supporting ledge have sufficient width to sustain the predicted displacement due to elongation of the parallel beams and rotation of the supporting beam allowing for typical construction tolerances?
- Is the supporting ledge adequately reinforced to limit potential spalling of the ledge supporting precast units. This is particularly important where supporting ledges are located in potential plastic hinge zones, as extensive spalling of cover will occur.

Figure 5.5(a) illustrates the case where the relative rotation between the floor and supporting beams introduces negative moments near the support (tension on the top surface of the floor). The magnitude of the bending moment introduced into the floor at the support depends on the amount and strength of reinforcement in the concrete topping and in any concrete cast into the hollow-core cells. Often in the past, starter reinforcement in the concrete topping was extended to a distance of 400 mm to 1.5 m into the floor, where it was lapped to mesh reinforcement in the topping. The flexural strength provided by the mesh, which has very limited ductility, is very much lower than that provided by the starter reinforcement and any "hairpin" or "paperclip" type reinforcement in the infilled cells. This potentially allows a brittle negative moment flexural to occur if negative moments, with or without axial tension, exceed the flexural strength where the starter bars are lapped to the mesh.

Figure 5.5(b) shows a diagonal tension failure of a hollow-core floor. In the negative moment region flexural cracking can develop on the top surface of the floor. Prestress strands in most hollow-core units used in New Zealand are located close to the bottom surface and consequently they induce either no compression or a small tension on its upper surface. With the formation of flexural cracks, the shear strength is limited to the flexural shear cracking strength, which reduces to the shear strength of an equivalent reinforced (non-prestressed) beam in cases where there is no compression stress due to prestress acting on the critical tension fibre of the member (see NZS3101-2006, 19.3.11.2.2). It should be noted that at simple supports, positive moment flexural cracks cannot develop and hence the shear strength is limited by web shear cracking. As web shear cracks develop at a much higher shear stress than flexural shear cracks test results from simple supported beams cannot be used to predict shear strength in negative moment regions.

Figure 5.5: Failures at or close to supports

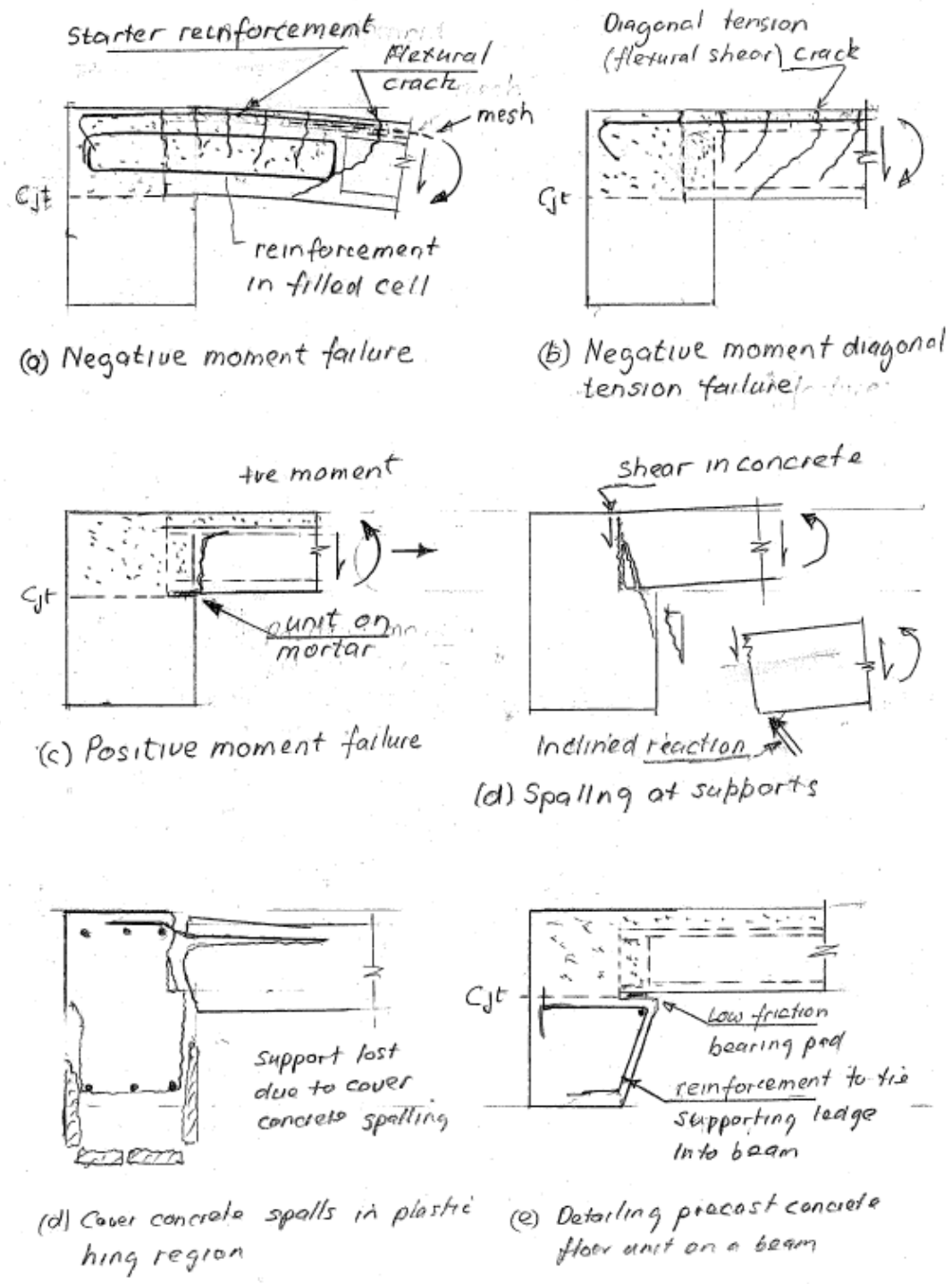

Figure 5.5(c) illustrates the case where the positive moment strength at the support detail is greater than the positive flexural strength of a hollow-core unit close to the support. This situation can occur when the hollow-core units are mounted on mortar, which together with infill concrete in the end 75 mm of the unit allows significant flexural tension to be transmitted into the soffit of the unit to generate a flexural tension crack. At this location the pretension strands are not developed to an appreciable extent and consequently they are ineffective at resisting the flexural tension force. At this location, the positive moment flexural strength is limited by the tensile strength of the concrete. A positive moment flexural crack in this location will widen due to rotation of the supporting beam and elongation of plastic hinges in beams. When the crack reaches a critical width collapse occurs.

Figure 5.5(d) shows spalling of the cover concrete of the beam, at a support. The structural actions inducing the spalling consist of a positive moment rotation and shear force in the hollow-core and a shear force is sustained by the insitu concrete at the top of the floor. The combination of these actions generates a concentrated inclined reaction between the precast unit and the supporting ledge as illustrated in the figure. This reaction can cause either the back surface of the hollow-core unit to spall, or the front portion of the supporting ledge spalls. In either case the length of ledge available to support the precast unit is reduced giving the possibility that collapse may occur if the remaining length is insufficient to accommodate movement due to elongation and construction tolerances.

Figure 5.5(e) points out the problem of supporting precast units in a potential plastic hinge region. In such zones extensive spalling of cover concrete may be expected, which may cause loss of the supporting ledge if it is not adequately tied into the beam.

Figure 5.5(f) shows the reinforcement detail which should be used to reinforce a supporting ledge into the beam together with a low friction bearing pad, which reduces the positive moment that can be transmitted to the hollow-core unit. The reinforcement should be anchored round a bar such that the low bearing strip is located on concrete that is protected by the reinforcement from spalling.

5.2.4 Incompatible displacements

Seismic deformation of a building can in a number of situations induce significant vertical displacement between adjacent hollow-core floor units or a hollow-core floor unit and other structural elements. The forces induced in attempting to restrain this deformation can in some cases lead to damage or collapse of the floor. A number of situations where damaging displacement can arise are illustrated in Figures 5.6, 5.7 and 5.8.

Figure 5.6 shows the plan of part of a perimeter frame in a building. Seismic forces cause the building to sway. The hollow-core units try to remain straight between their supports. Due to the deformation in the beams, vertical displacements develop between the beam and the adjacent hollow-core unit, as illustrated in the Elevation A-A in the figure. The situation illustrated in the figure is particularly severe as the corner rises, as illustrated, as the cantilever beam that is parallel to the precast units is stronger than the beam at right angles due to the interaction of the precast unit and beam. However, it should be noted that a test has shown that even if the hollow-core unit is supported on transverse beams framing into each column the vertical deflection induced is sufficient to result in premature collapse [Matthews 2004] unless a flexible linking slab is used between the beam and adjacent hollow-core unit

(see 5.3.2.6). As illustrated in section B-B of the figure, the concrete topping and upper portions of the hollow-core unit acts as a lever to apply tension to the webs, which fail one after the other. The complete separation of the soffit portion of the hollow-core unit containing the pretension strands from the top portion of hollow-core unit and insitu concrete can occur. The stage at which collapse occurs depends on the support details and the vertical seismic forces acting on the floor.

Figure 5.6: Incompatible displacements between beam and hollow-core floor units

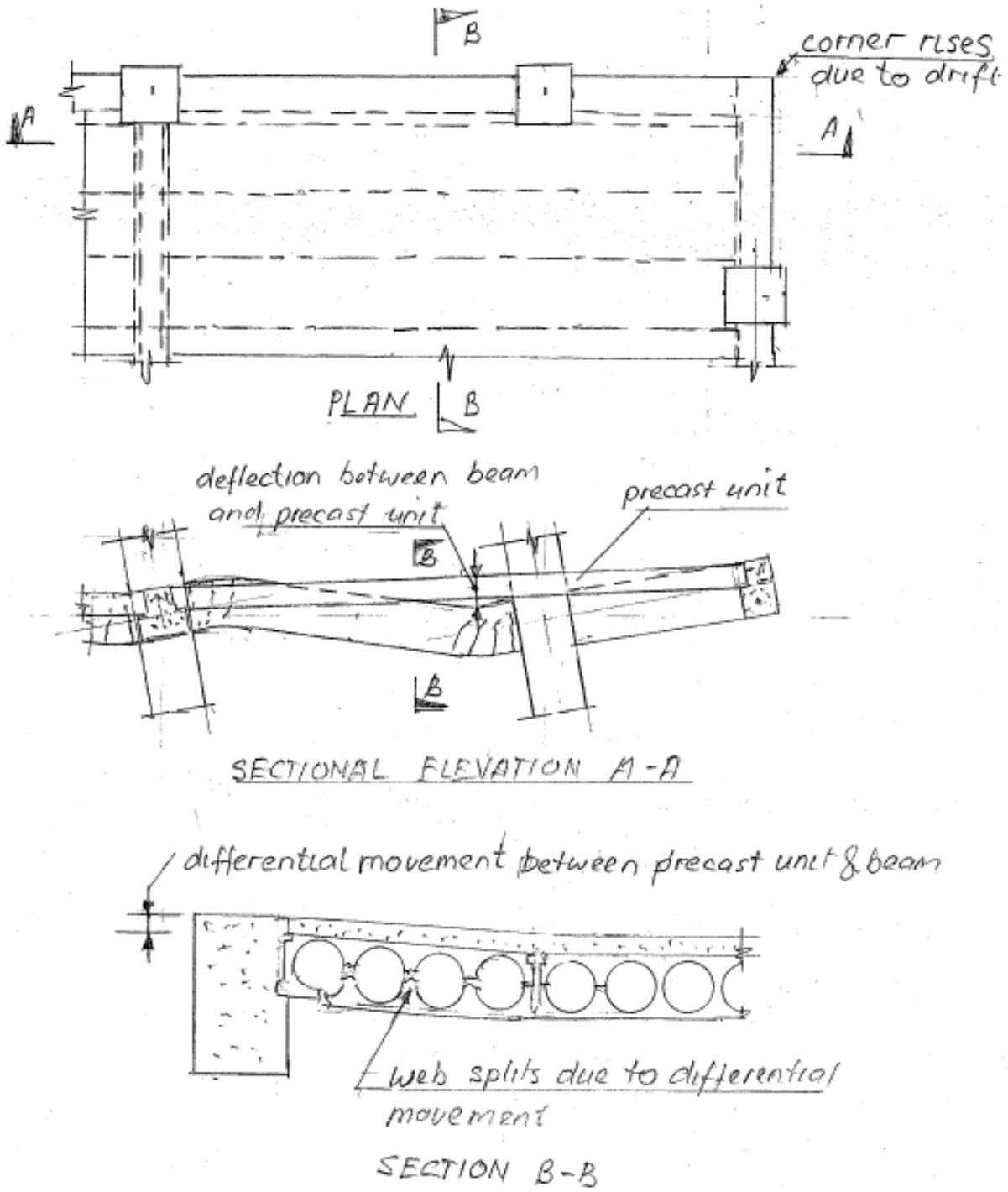

Figures 5.7 and 5.8 illustrate problems which can arise when structural components supporting hollow-core units deflect in such a way that they twist the precast floor units. Hollow-core units act as box sections and consequently they have a relatively high stiffness. As there is no torsional reinforcement in these units, torsional cracking may be expected to result in failure at relatively low angles of twist. In Figure 5.7, the vertical movement of a corner cantilever beam results in torsional moment being induced in any precast unit supported by it. Similar angles of twist may also arise if the precast floor units are supported on a coupling beam, see Figure 5.7, or on the active link in an eccentrically braced steel frame, see Figure 5.8. It should also be noted that appreciable vertical displacement can also arise between eccentrically braced frames and precast floor units, see Figure 5.8. Flexible linking slabs are required to prevent such differential vertical displacements from severely damaging the hollow-core units and potentially causing collapse.

Figure 5.7: Torsion induced in units due to drift

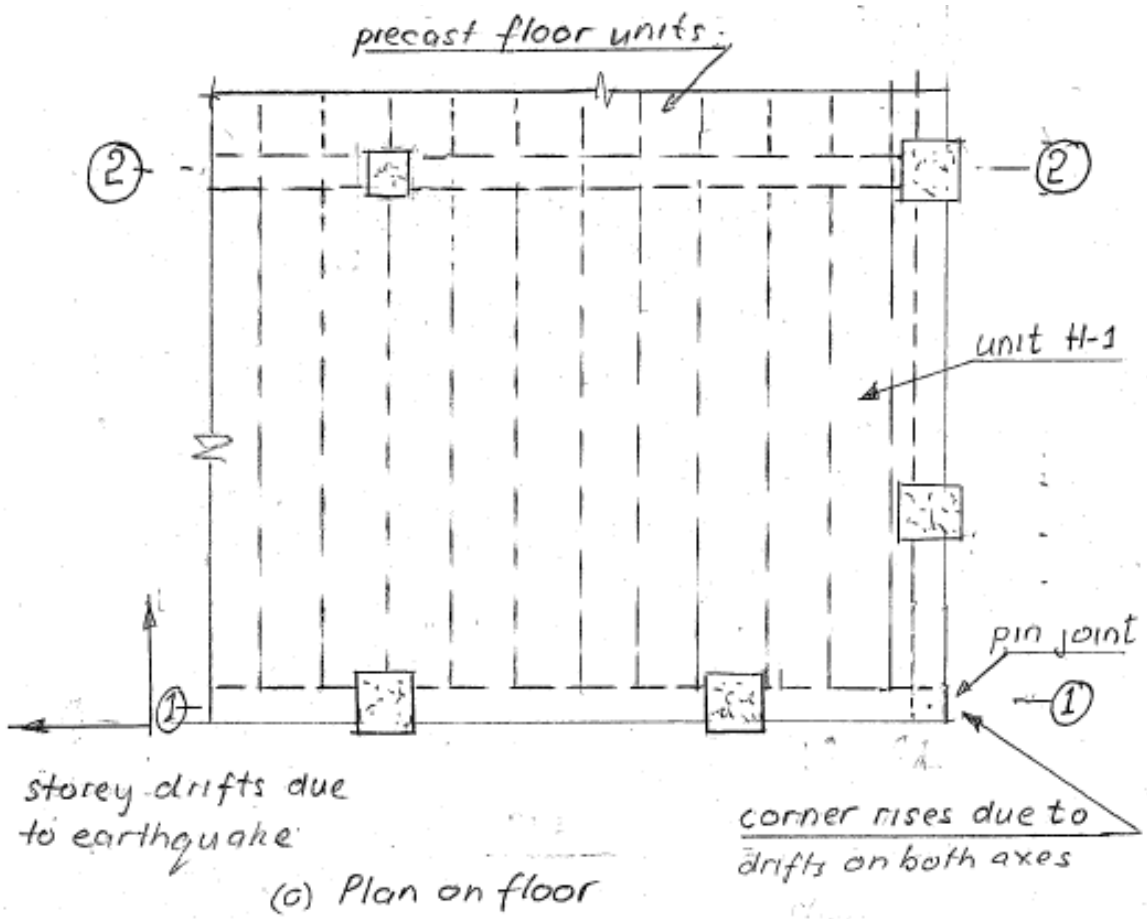

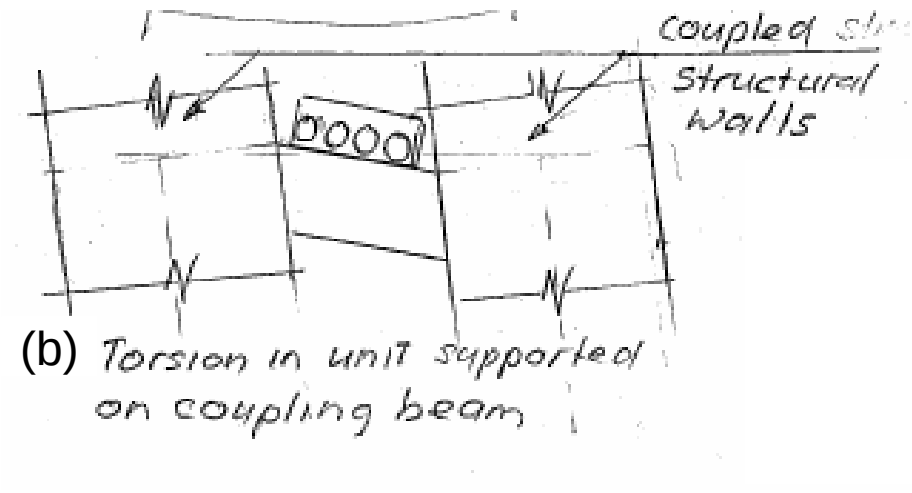

(b) Torsion in unit supported on coupling beam

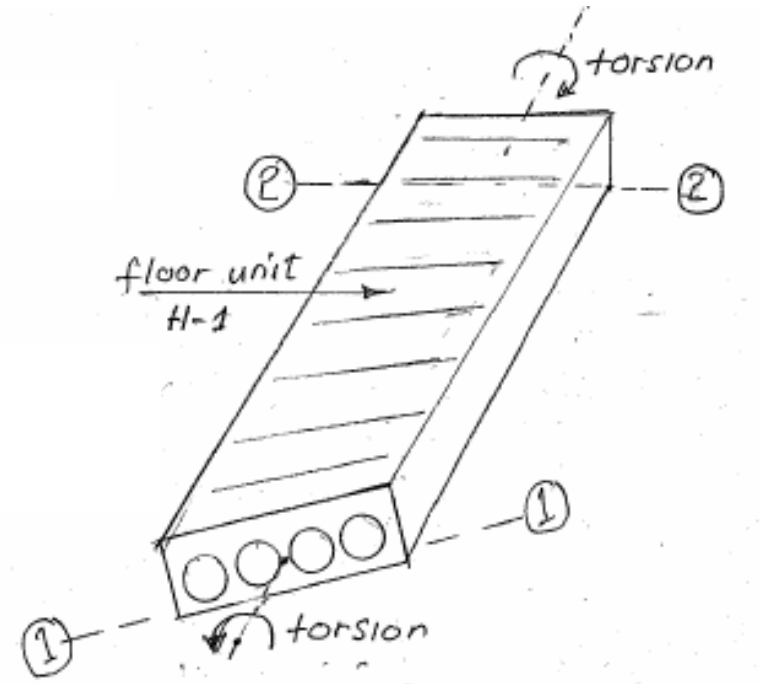

(c) Torsion in unit H-1

Figure 5.8: Hollow-core units and eccentrically braced frame

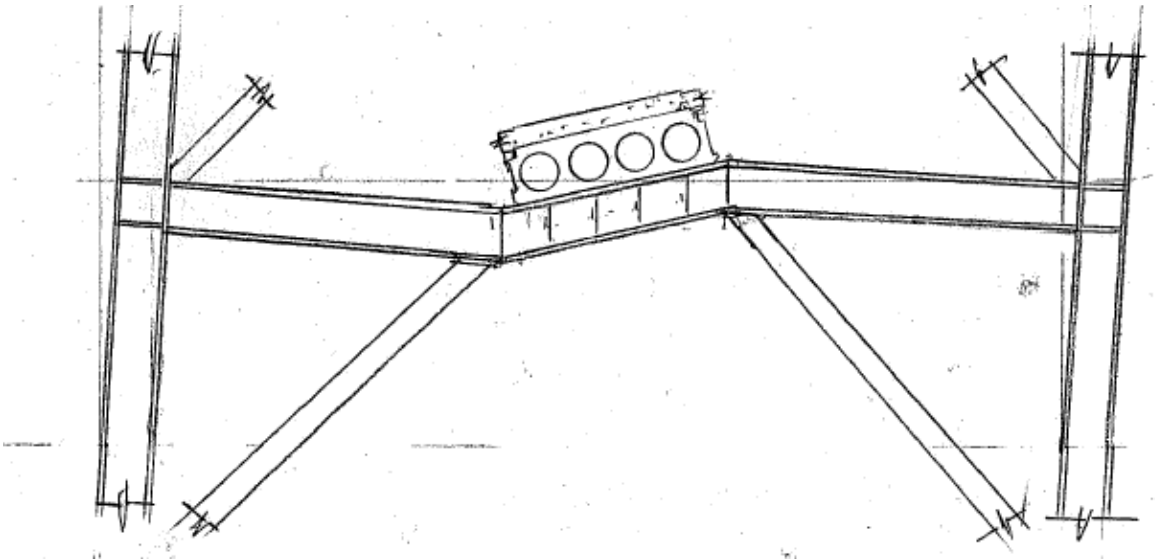

(a) Hollowcore unit supported on an eccentrically braced frame.

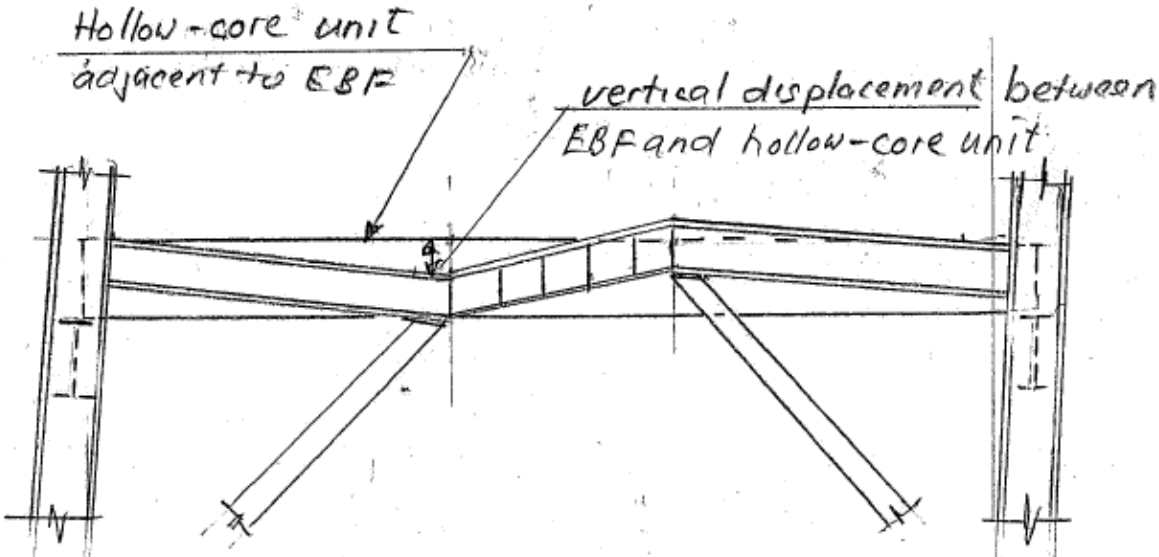

(b) Incompatible displacement between a hollow-core floor unit and an eccentrically braced frame

Figure 5.9 shows the case where one end of a hollow-core floor is supported on a pair of structural walls. Lateral displacement of the walls generates relative vertical deflection between the walls and between hollow-core floor units supported by the walls. The vertical deflection can cause the webs to crack in tension giving a potential failure condition.

Figure 5.9: Vertical displacement between adjacent hollow-core units supported on two walls

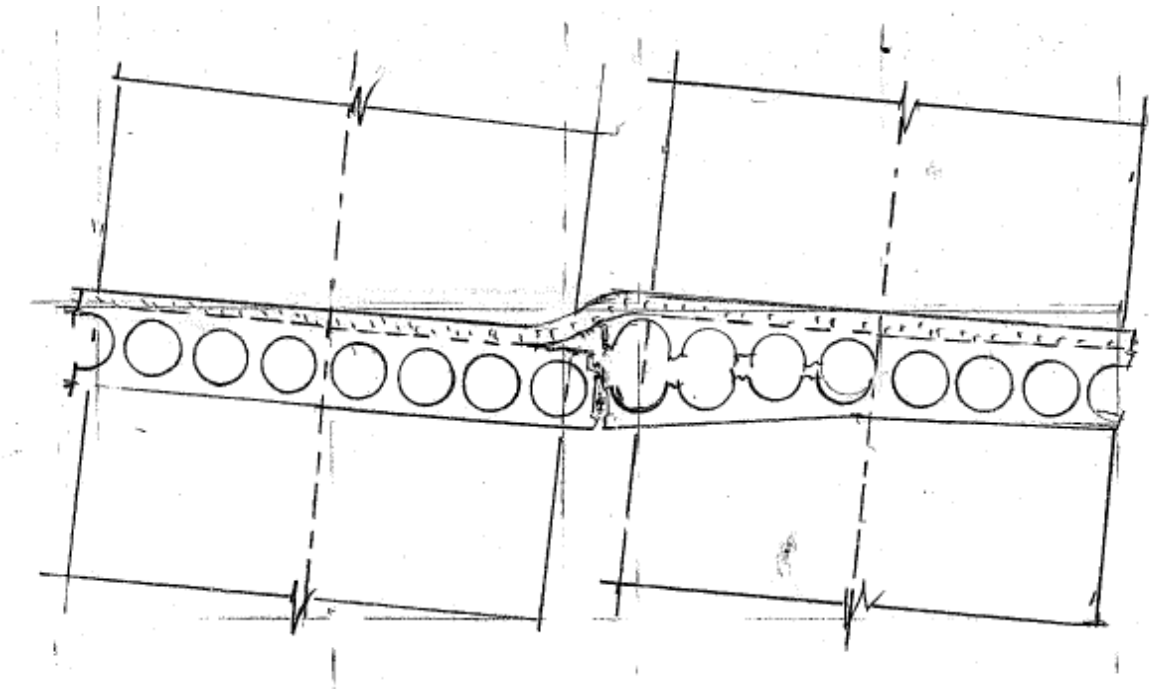

5.3 Possible failure mechanisms

The possible failure mechanisms for hollow-core are summarised in Table 5.1. The table has references to sections of the document, the discussions on fundamental causes, critical assessment criteria and key design parameters.

Table 5.1: Summary of failure modes

Failure modes	Causes or sources	Critical assessment criteria	Reference Section
5.3.1 Loss of end support			
Floor dislodging from supporting ledge 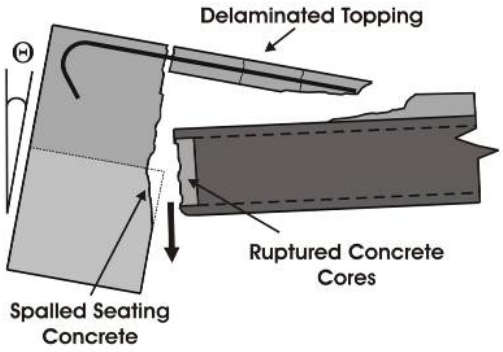 *Example of one of the four modes of loss of support at the floor-to-beam interface*.	Inadequate "as-built" width of support for the unit, considering the spalling of the edge of the supporting ledge and/or fracture of the edge of the soffit of the hollow-core unit	*Can apply to supports on concrete and steel beams and walls.* Minimum seating width: *If less than this actual seating width is available then the floor is prone to collapse* • Expected pull-off of the floor from the support • Relative rotation between the beam and floor • Construction tolerance that need to be considered • Floor supported on unreinforced or reinforced cover concrete: spalled edge of ledge or unit • Residual bearing width • Creep and shrinkage If the longitudinal reinforcement in the PHZ should yield under seismic action – it should be assumed that this spalling will occur.	5.3.1 5.3.1.1 5.3.5.4
Spalling of the cover concrete of the supporting beam in the Plastic Hinge Zone 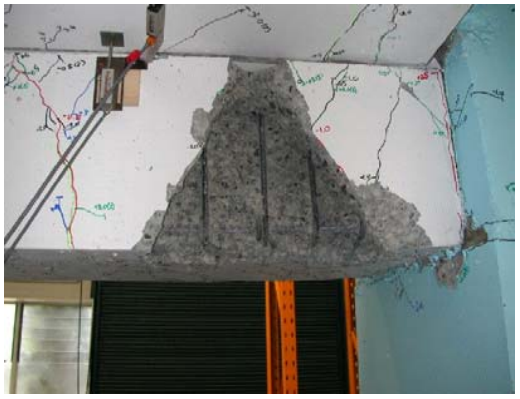	Spalling of cover concrete at Plastic Hinge Zones		5.3.1.3

Failure modes	Causes or sources	Critical assessment criteria	Reference Section
Actions associated with loss of support to a web 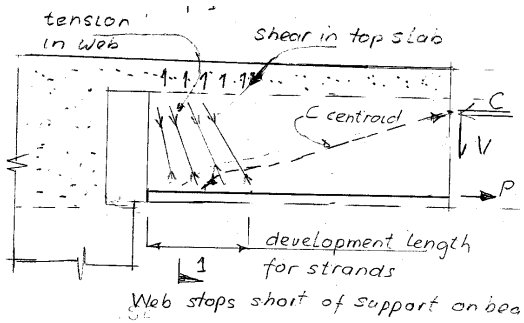	Cut outs or uneven contact along the support can cause	Simplistically, it can be assumed that for every web or group of strands cut that the flexural capacity of the floor is reduced in portion to the number of strands cut. The shear capacity of the modified section should be determined according to section 5.3.1.8 where loss of support of a web(s) is considered. When significant modification of a unit occurs, there is required redistribution of gravity loads to other members or floor units – advice from the precast manufacturer should be sought.	
5.3.2 Slab action **Bending moment effects**			
1. Negative moment effects 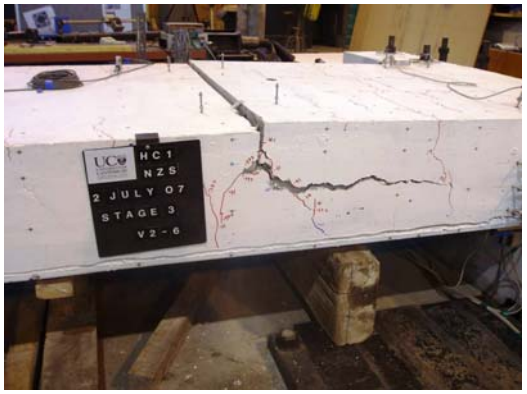	Negative moment induces tension of the topping. Shear failure can occur.	These types of failure has the potential to be brittle so should be avoided. Hollow-core floors which contain mesh reinforcement, filled cores or over reinforced connection details, are particularly vulnerable to this kind of failure. Initial vertical crack forms at a relative rotation between the unit and the support $\theta \geq 0.2\%$ This is the limit of the elastic response of the unit, assuming the “pull off” is negligible.	5.3.2.1

Failure modes	Causes or sources	Critical assessment criteria	Reference Section
2. **Positive moment effects**  	Positive moment induces tension on the soffit of the unit. The floor can be unseated due to a combination of pull-off and relative rotation between the beam and floor.	Loss of support, including the dowel action of the strands in the unit, is assumed when the width of the vertical crack exceeds: $\text{Ø} \times 0.8 \times d_s$ where Ø = 0.6 ds = diameter of strand It is assumed that loss of support will NOT occur, if: • A crack of 0.5 mm or more, in the topping, at the back face of the unit AND the unit is not seated on mortar. • A crack of 2 mm or more, in the topping, at the back face of the unit AND the unit is seated on mortar. • If cells at the end of the hollow-core have been broken out, reinforced and filled with concrete.	5.3.2.3
Failure due to incompatible displacements First unit cast in to beam 	The first hollow-core unit cast in to the adjacent beam (concrete or steel, including EBF link spans) undergoes curvatures produced in the beams. These can lead to loss of the lower half of the first unit.	Assume that if a unit is next to any beam – this mode of failure is likely. Extensive guidelines for assessment of the extent of damage to the first unit are given in section 5.3.2.6.	5.3.2.6

Failure modes	Causes or sources	Critical assessment criteria	Reference Section
Over-reinforced, concrete filled cells of the units	Paper-clips or hairpins in concrete filled cells can “over-reinforce” the units leads to failures and collapse that start at the ends of the infills.		
Overload of linking slab between the floor and beam or to walls 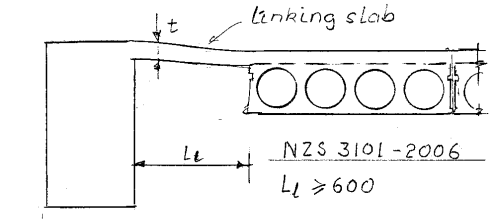 linking slab to allow differential movements between beam and floor 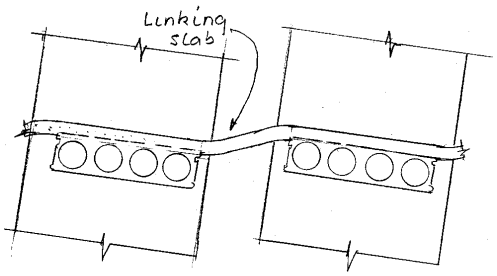 a) Hollow-core units supported on adjacent walls	Relative displacement between the beam, EBF link or wall and the first hollow-core unit	Slab flexure and shear requirements (NZS 3101)	5.3.2.6

Failure modes	Causes or sources	Critical assessment criteria	Reference Section
5.3.2.7 Torsion failure of hollow-core units 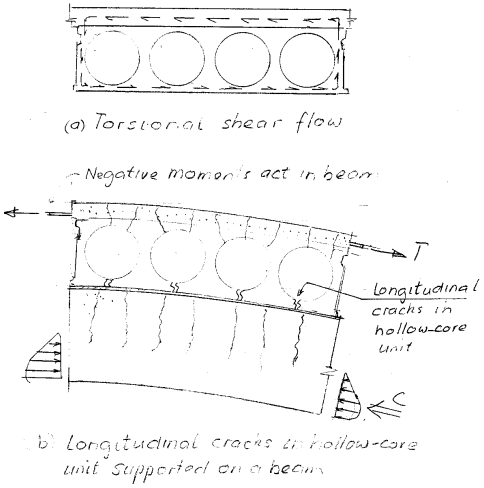 	Torsional actions may be applied to hollow-core units causing cracking of the unreinforced sections of the unit. The torsion actions arise from differential rotation of supports , at each end of a unit, or differential displacements between a hollow-core unit and an adjacent structural member	It is suggested that the safe twist per m length of hollow-core floor with insitu concrete topping should be less than: • 0.001 radians per metre for 300 hollow-core and • 0.002 radians per metre for 200 mm hollow-core.	5.3.2.7
5.3.3 Diaphragm action			
1 Gaps between the floor and supports 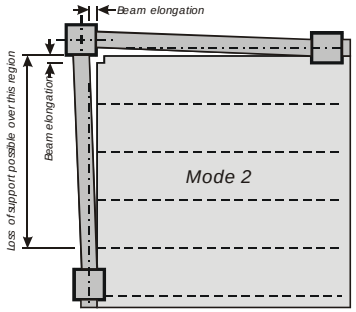 	Columns and walls can be separated from the diaphragm because localised high strains and damage to the neighbouring floor. The compression load path and possibly the tension load path can be compromise.		5.3.3

Failure modes	Causes or sources	Critical assessment criteria	Reference Section
			
2 Hollow-core partially supported on walls 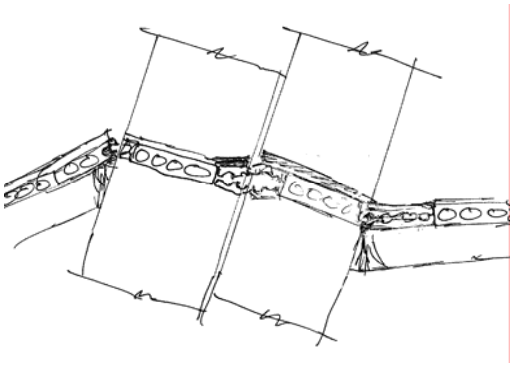	The hollow-core unit that straddles two adjacent walls or from a secondary beam on to the wall, will be subjected to deformations beyond the capacity of the unit. Typically web splitting and loss of gravity capacity occurs.		

Failure modes	Causes or sources	Critical assessment criteria	Reference Section
3 Hollow-core spanning next to walls 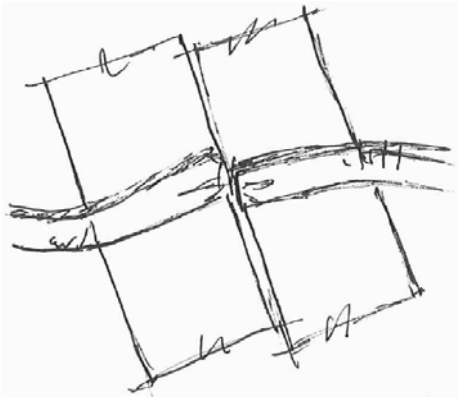	Similar issues to units next to beams. Either there will be concentrated damage at the junction of the walls – may lead to loss of flexural strength , including delamination of the topping and separation of the lower half of the unit. Possible loss of the lateral load path in to the walls from the diaphragm will occur.		
5.3.4 Structure restraint			
Diaphragm action and column tie-back. 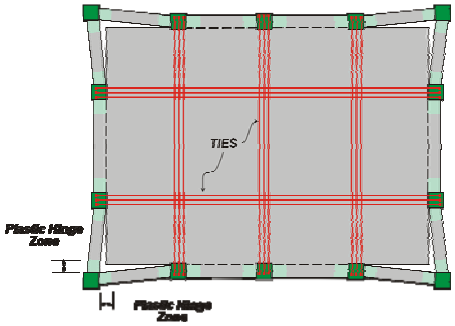	Localised delamination and possible rupture of topping steel (cold-drawn wire mesh), elongation of hinging beams (concrete and steel) leading to large cracks in the topping of the floor, insufficient reinforcing steel in the topping to tie the columns back in to the floors and to provide the tension capacity needed in the floor plates.	Minimum tie back force should be a percentage of the maximum axial force on the column, at that level: • Concrete column 5% • Steel column 2.5%	5.3.4

Failure modes	Causes or sources	Critical assessment criteria	Reference Section
5.3.5 General demand considerations			
Cut-outs and on-site modifications 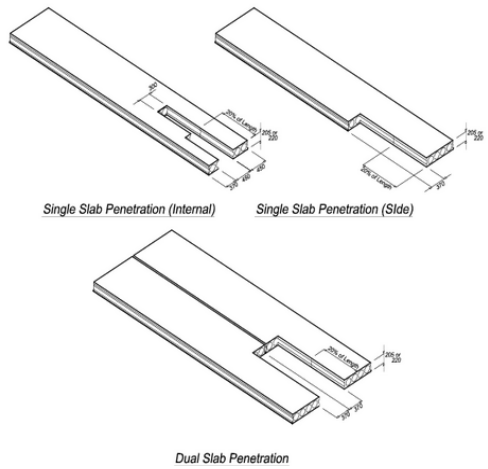 	The hollow-core unit will cut to allow access for services or to avoid a clash of the unit and other structural elements. These are actions and may not be done with the knowledge of the precasters, structural engineer or main contractor. Often holes are cut after the building is occupied (changes of use).	Consult the precast manufacturer.	5.3.5.1
Delamination of the insitu concrete topping	Delamination at PHZs and out in to the floor under successive ductility demands in the structure.		5.3.5.2

5.3.1 End support

Loss of support for the hollow-core floor failure mechanisms:

- The width of supporting ledge may be insufficient to support the floor; consideration needs to be given to construction tolerances, edge distance, minimum bearing, likely beam elongation, relative rotation and spalling of cover concrete.

Loss of support: Designers recognise that there is an inherent difference in performance/ integrity of precast flooring systems and traditional cast-in-place concrete floors. Essentially, it is felt that precast, topped floors are not as robust or tolerant of racking movement and not as effective as diaphragms under earthquake actions as cast-in-place floors. As with any suspended floor, the consequences of failure to carry gravity loads are significant. Even a localised collapse is likely to overload the floor below, leading to a progress collapse of a large number of floors. The loss of life and property can be considerable when compared to effects of a localised shear failure of a beam or even dropping precast cladding panels in to the street. The consequence of losing support of a floor or multiple floors is significant loss of life.

Basic seating allowance: The width support provided by the concrete ledge is a function of a number of features that need to be considered in either design or assessment of an existing structure. These features include:

- expected pull-off of the floor from the support
- relative rotation between the beam and floor
- construction tolerance that need to be considered
- floor supported on unreinforced or reinforced cover concrete
- shrinkage and creep shortening of the floor
- loading or displacement demand on the structure
  - to satisfy the NZ Building Act, performance under both the design based earthquake (approximately 500-year return period) and the maximum credible earthquake (approximately 2500-year return period) – the latter is concerned with producing an acceptably low probability of collapse
- current design standard requirements
  - NZS 3101:2006 has a minimum width of seating that must be in place after all reasonable construction tolerances have been allow for. This minimum includes some allowance for the support being pushed away from the floor by elongation of the adjacent structure and accounts in a rudimentary way for the displacements imposed on the structure in an MCE event.

These features are discussed in detail in the following sections.

5.3.1.1 Loss of support through spalling of the edge of the supporting ledge and/or fracture of the edge of the soffit of the hollow-core unit

The following discussion summarises the research undertaken by J Jensen [Jensen et al 2007], unless otherwise noted.

For hollow-core units supported on bare un-reinforced ledges ("seat" or "seating"), two distinctive mechanisms for loss of support of a hollow-core floor with insitu concrete topping have been described. These failure modes are the loss of seating with delamination of the insitu concrete topping (LOSD) and loss of seating without delamination of the insitu topping and rupture of the starter/continuity bars (LOS).

Loss of support can, in part, be attributed to three modes of damage and the interaction of these modes. The first is the trapping of the seated portion of the soffit of the hollow-core unit in to the adjacent cast insitu beam. The second is the spalling of the un-reinforced beam ledge that supports the hollow-core units. The third mode is the rupture of the cast insitu concrete "stubs" in the ends of the voids in the hollow-core units. See Figures 5.10a and b and Figure 5.11.

Figure 5.10: LOSD and LOS failure mechanisms

a) Loss of seating with delamination (LOSD)

b) Loss of seating without delamination (LOS)

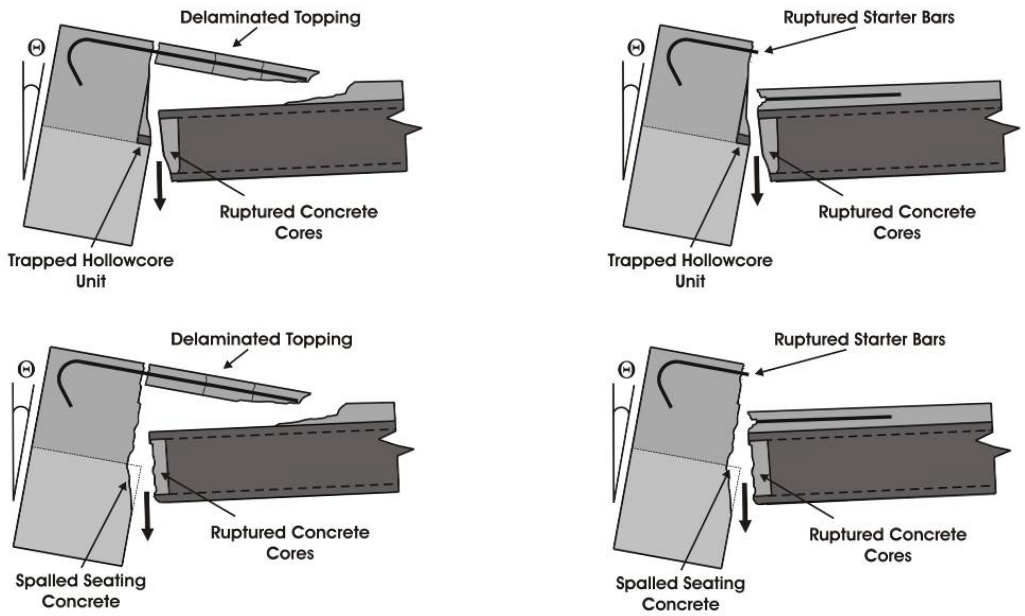

Source: Jensen 2007.

Figure 5.11: Specimen HC3 – 35 mm seating

a) Collapse of HC3 at -2.0% drift

b) Underside of HC3 test specimen

c) HC3 seating beam post test

Source: Jensen 2007.

It was reported that for the specimens examined, the hollow-core units did not slide on the bare ledges, as is traditional believed. The damage to the ends of the hollow-core units, to the "stubs" and the edge of the supporting ledges forms a nearly vertical interface between the supporting beam and the end of the hollow-core units. The mode of collapse was the floor system sliding down this interface until all support (aggregate interlock and friction) was lost.

The onset of the damage modes, shown in Figure 5.10, was observed at **0.25%** relative rotation between the supporting beam and floor unit that caused the hollow-core soffit to be in tension. At this early stage of loading, the elongation applied to the specimen was negligible.

5.3.1.2 Loss of support through spalling of the cover concrete of the supporting beam in the Plastic Hinge Zone

Lindsay et al [2004] observed that the cover concrete in the plastic hinge zones of beams delaminates – see Figure 5.12.

Should hollow-core units be seated in the Plastic Hinge Zones, it should be assumed that support with be lost. The length of this zone can be greater than the overall depth of the beam.

This assumption of loss of support is consistent with requirements of NZS 3101 [2006] for detailing of new structures. The Standard does not permit hollow-core to be supported on the cover concrete of potential plastic hinge zones. For such regions an alternative support system is required for hollow-core units, see section 8.

Figure 5.12: Section of unreinforced seat fallen away

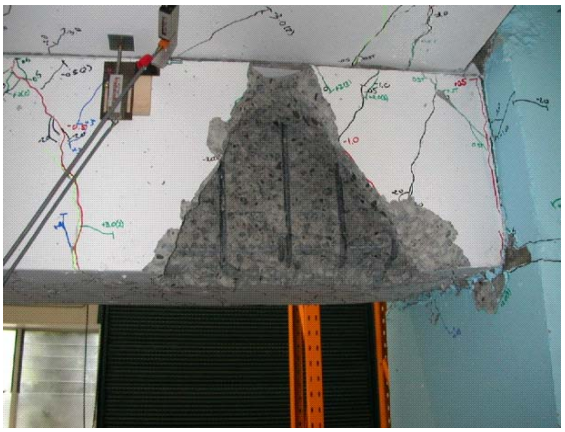

Source: Lindsay 2004.

5.3.1.3 Influences of the elongation of the beams parallel to the span of the floor and relative rotation between the floor and supporting beam

In concrete moment resisting frames, elastic and plastic longitudinal elongation of the beams occurs at "plastic hinge zones" (PHZs). When the elongating beams are parallel to the span of the flooring units, this elongation can "push the supporting beam away" from the floor. This feature occurs at the same time as the interface between the floor and beam is damaged.

For structural steel buildings – elongation is less than that seen for similar inter-storey drifts in concrete buildings. In steel moment resisting frames, it may be assumed that the elongation of each beam plastic hinge is **half** that assessed for a reinforced concrete beam of similar depth and strength.

Complete collapse of topped hollow-core floors is a function of two facets: primarily "elongation" and secondly "the relative rotation between the supporting beam and the floor". Relative rotation causing tension on the soffit of the unit reduces the width of contact between the floor and supporting beam. Associated with this rotation is elongation in an adjacent beam plastic hinge zone, which pushes the supporting beam away from the floor. These two actions reduce the support length for hollow-core units and can result in collapse.

Support of a floor may come from seating provided on walls. Similar issues of the supporting wall being pushed away from the floor and relative rotations between the wall support and floor occur. These mechanisms of loss of support are functions of the structural configuration of a specific building.

The amount of elongation and drift required to drop the floor is influenced by the original provided width of seating (the actual contact width of the hollow-core soffit on the supporting ledge – not the width of the ledge as cast or flange dimension if a steel angle or similar is used). The larger the original width of contact between the hollow-core soffit and the ledge, the greater the elongation required to cause collapse. However, increasing the contact width beyond a certain point could restrain the ends of the units and could lead to other forms of failure in the hollow-core units, such as flexure-shear failure when the soffit of the unit is in tension.

5.3.1.4 Calculating the required width of seating or ledge

NZS 3101:1995 and 2006 require that after tolerances have been used up, these minimum seatings must remain. The tolerances should be realistic allowances as described in the "Precast Guidelines" [1998]. The absolute values of the required tolerances are not expected to be added together. The "Precast Guidelines" suggest using "square-root sum of the squares" of the tolerances.

Once tolerances to NZS 3109 have been considered for: out of position, cross-sectional dimensions and straightness of the beam and length and squareness of the unit, the result if added algebraically is 36 mm of tolerance. If the alternative of $\sqrt{[\sum x_i^2]}$ is used, then the allowance for tolerances reduces to **17 mm**. This would be an acceptable allowance.

NZS 3101 [2006] has a minimum width of seating of 75 mm that must be in place ***after*** all reasonable construction tolerances have been allowed for. This Code minimum includes some allowance for the support being pushed away from the floor by elongation of the adjacent structure and accounts in a very rudimentary way for the displacements imposed on the structure in an MCE event. The Commentary to NZS 3101 [2006] says that shrinkage and creep need not be considered with the 75 mm prescribed by Clause 18.7.4 – this is thought to be accounted for by the 15 mm minimum overhang at the back of the unit. This "75 mm" allowance may be unsafe in some cases – a method for a detailed assessment of seating width follows.

If a detailed design or assessment of an existing connection is required, the seating widths need to allow for:

- Residual seating: Precasters have recommended that, in an extreme event, the residual width of seating for precast units (hollow-core, flat slab and rib) should be 20 mm. At this time the minimum residual seating width for tee and double tee units has not been determined; this should be larger.

- Spalling of the support or unit: 20 mm total loss of support through spalling of the unit or seating or both (aggregate of 20 mm total with partial damage in each). All the bare ledge specimens of Jensen et al [2007] sustained between 10 and 35 mm loss of support due to spalling from either the end of the hollow-core unit or the front surface of the supporting ledge (see Figure 5.10). The recommendation of a reduction of 20 mm is a mean value of loss of support and it should be treated as an absolute minimum.

- Shrinkage and creep of the floor (topping and unit): **At each end** of the floor unit, allow for ½ x 1.0 mm/m of floor span.

- Tolerances of placing of floor units: **17 mm** (by "square root of the sum of the squares", from CAE "Precast Guidelines" 1998).

- Elongation: elastic and plastic elongation occurs: Calculation of elongation at the mid-depth of the hinging beam – a function of plastic rotation of the hinge and location in the structure: Elongation at the mid-depth of the hinging beam – from section 5.3.3.4:

  $$\delta_l = \theta h \leq 0.04h$$

  Equation 1

  Where $\boldsymbol{h}$ is the overall depth of the hinging beam and $\boldsymbol{\theta}$ is the rotation at the support, nominally the interstorey drift, Δ, divided by the storey height. Note that this equation is an empirical formula based on observed behaviour after a number of cycles of inelastic movement in a beam plastic hinge zone. With reference to Figure 5.5, this is approximately double the geometric displacement that would be expected if a simple rotation, $\boldsymbol{\theta}$, about the centreline of the beam had been considered.

  Elongation in structural steel moment resisting frames may be taken as half that of the equivalent reinforced concrete beam (similar "***h***" and similar yield strength).

  Equation 1 is an upper bound value, determined for beam hinges next to corner columns. There is an option to use a reduced $\boldsymbol{\delta_l}$ for specific situations.

- Geometric displacement of the floor relative to the support: Another source of moving the support away from the floor is the geometric lateral displacement between the support ledge and the mid-depth of the hinging beam, $\boldsymbol{\delta g}$. See Figure 5.13.

  $$\delta_g = \left(\frac{h}{2} - h_L\right).\theta$$

  Equation 2

  Therefore, if the ledge coincides with the mid-depth of the beam then there is no geometric displacement.

Figure 5.13: Elongation and geometric displacement of the ledge away from the soffit of the floor unit

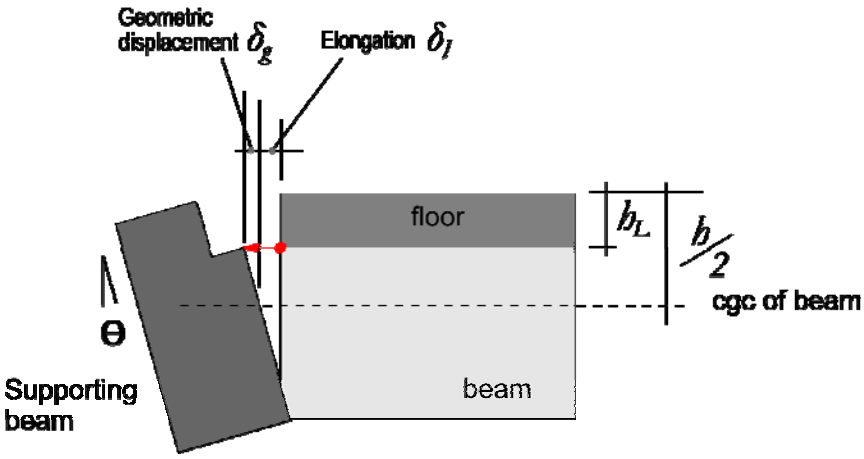

Below are two examples of calculating the width of seating:

1. Reinforced concrete beams of moment resisting frames – comprehensive calculation: The residual seating of **20 mm** after a major event is needed.

   - Elongation of PHZs in beams
     - Take the beam as $\boldsymbol{h}$ = 1000 mm.
     - At MCE, the drift/rotation $\boldsymbol{\theta}$ is 3.5% (< 4.0%).
     - Elongation at mid-depth of the beam is:
       = 0.35 x 1000 ≈ **35 mm**.
     - Geometric elongation
       Ledge height $\boldsymbol{h_L}$ (ledge to top of beam) = 150 mm
       Geometric elongation is $\left(\frac{h}{2} - h_L\right).\theta$
       = (1000/2 – 150) x 0.035 = **12 mm**
   - Shrinkage and creep
     - Span of floor unit = 10 m – therefore shortening at one end
       = 0.5 x 1 x 10m = **5 mm**
   - Spalling of the unit and support ledge
     Designers need to allow for a minimum of 20 mm* of spalling of the un-armoured concrete unit **<u>or</u>** ledge
     * The allowance for a loss of cover by spalling of 20 mm may not be sufficient is all cases.

   A minimum of 20 mm* of spalling of the un-armoured concrete unit **<u>or</u>** ledge, 20 mm of residual ledge for support, 5 mm for shrinkage and 35 mm elongation at mid-depth, a further 12 mm pull-off at the level of the ledge. This aggregates to:

   20 + 20 + 5 + 35 + 12 = minimum seating AFTER tolerances = 92 mm

   – Therefore when including the mandatory tolerances of 17 mm:
     ∴ the minimum design width of ledge ≈ 110 mm.

2. By NZS 3101 [2006]:
   - 75 mm seating (code minimum) + 17 mm tolerances = 92 mm minimum ledge width, say **95 mm**.
     This is significantly shorter than the recommended method above.

5.3.1.5 Lack of reliability in load paths through the insitu concrete topping for support gravity

The starter/continuity bar reinforcement cast into the seating beam and in-situ topping on the hollow-core unit cannot be relied upon to provide vertical support to the unit. Either delamination of the in-situ topping concrete from the unit or rupture of the starter bars at the cracked interface between the hollow-core units and seating beam prevents this reinforcement from providing effective vertical support, see Figure 5.10.

Figure 5.14 shows a delamination failure with the unit sliding down the interface between the unit and beam. Another feature of this type of delamination is the rupture of cold-drawn wire mesh at the section where the starter/continuity bars stop. Therefore, such an arrangement of mild steel starter bars lapping to cold-drawn wire mesh can not be relied upon to hold up the floor should support be lost.

More recent buildings have conventional mild steel covering the entire floor, embedded in the topping concrete. In this situation, it is expected that the topping reinforcement would not rupture. However, the topping may continue to debond from the precast units or break out of the concrete and be ineffective at restraining the precast units from collapse.

Rupture of the starter/continuity bars can occur when there in no delamination of the topping from the hollow-core unit. It may be assumed that the bars will rupture when the crack at the interface between the unit and the support is larger than **15 mm** (at the level of the bars).

Figure 5.14: HC1 delamination and sliding failure

a) HC1 during test prior to collapse

b) Collapse of HC1 at 25 mm elongation

c) HC1 seating beam post test

d) HC1 hollow-core unit post test

Source: Jensen 2007.

5.3.1.6 Performance of the supporting ledge and the soffit of the hollow-core unit when low friction bearing strips are provided on the seating ledge

Lindsay et al [2004] and MacPherson et al [2005] reported that the presence of a low friction bearing strip on the supporting ledge significantly reduced damage to the edge of the seating and to the soffit of the hollow-core units.

In evaluation an existing building it may be assumed when a low friction bearing strip is provided (similar to that described in NZS 3101[2006], Clause 18.7.4(b)), with at least 15 mm set back from the edge of the ledge, that spalling will be minimal. Therefore, **the reduction of 20 mm** on the provided, "as-built" width of bearing is **not** required.

5.3.1.7 Floor-to-wall performance of the supporting ledge and the soffit of the hollow-core unit

The above discussion focuses on findings for floor-to-beam connections, but the same behaviour can be expected when the hollow-core units are supported on corbels/ledges that are part of wall elements. The issues affecting performance of a connection are:

- the relative rotations at the support,
- elongation ("pull-off") that may occur at the connections,
- detailing of the connection (bare ledge, bearing strip, width of effective seating).

5.3.1.8 Actions associated with loss of support to a web

Figure 5.15 illustrates the situation where the support to one of the hollow-core webs is missing. Positive moments acting near the support of the unit cause the line of action of the compression force, C, to follow the inclined trajectory shown in the figure, with the shear force being resisted by the vertical component of the compression force. The prestress force in the development length of the strands resists the longitudinal component of the compression force, C. This leaves the shear force to be carried by the vertical component of tension stresses in the web. Above the web this tension force is resisted by shear in the concrete, which in turn is balanced by compression forces in the adjacent webs. If the shear force in the web is of sufficient magnitude the web will split. Tensile stresses induced by this action combined with anchorage zone stresses associated with the pretension strands [Fenwick et al 2004] will increase the tendency for splitting to occur due to other actions.

Loss of support to a web of a hollow-core unit can arise due to:

- a web being cut to allow access for services or to prevent the hollow-core unit impinging on another structural element
- the hollow-core member being supported on a beam, which can be subjected to curvatures of sufficient magnitude to cause one or more of the webs to lift off the supports
- spalling of concrete in a plastic hinge region under some of the webs of a hollow-core unit.

Figure 5.15: Tension induced in a web due to loss of support

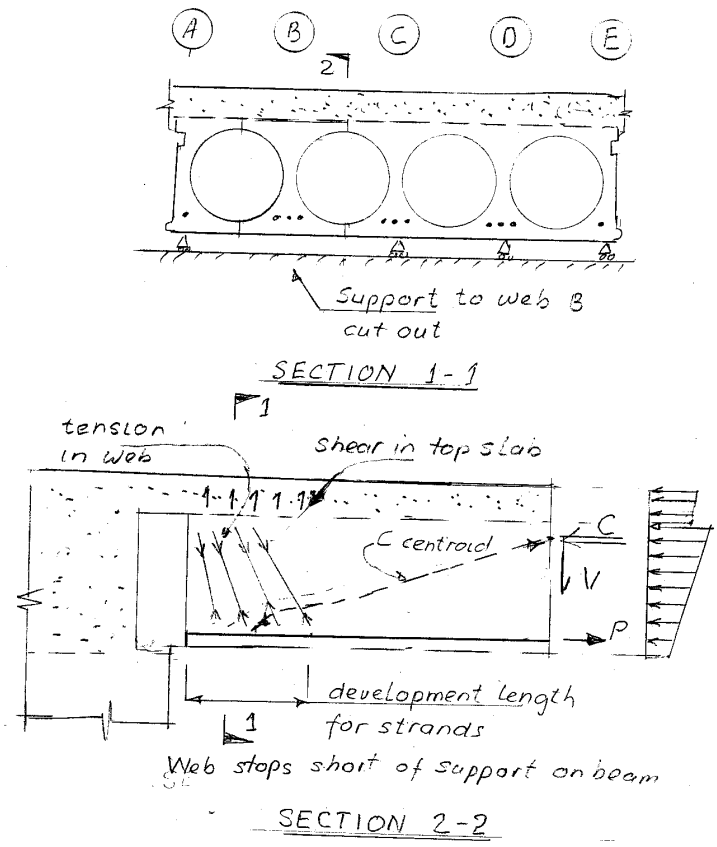

5.3.2 Slab action

1. Actions associated with bending moment effects adjacent to supports include:
   - positive moment failure close to the face of the support, including dowel / prying action of the concrete plug cast into the ends of the units
   - negative moment failure at the end or close to the end of started bars in the topping concrete or reinforcement in-filled webs, if these are present
   - vertical seismic loading, up or down.

2. Actions associated with shear / torsion effects in hollow-core units include:
   - torsional failure due to twist applied to hollow-core units due to deformed shape or displacement of supporting or adjacent structure
   - web splitting due to vertical shear transfer or differential incompatible displacements
   - diagonal tension failure of un-reinforced webs in negative moment zones.

5.3.2.1 Behaviour of hollow-core units under gravity loading

Hollow-core units have been designed to resist gravity loads as simply supported members. The pretensioned strands are located close to the soffit of the unit, which gives these units have a high positive moment flexural strength but low negative moment flexural strength. The shear in positive moment zones, which do not contain flexural cracks but is outside the

transmission lengths for the pretensioned reinforcement, is resisted principally by the vertical component of the flexural compression force, as illustrated in Figure 5.16. Diagonal tension cracking, which defines the shear strength of members without shear reinforcement, can arise in two ways, namely flexural shear cracking or web shear cracking.

- Flexural shear cracking is critical in regions which contain flexural cracks. This form of shear failure is generally not expected in floors containing pretensioned units under gravity load conditions as flexural cracking is not expected to occur, except possibly in the mid-span region where the shear stresses are low.
- Web shear cracking can develop in a region of a beam which does not contain flexural cracks but is subjected to high shear stresses. This form of diagonal cracking is generally critical in low moment zones in members with thin webs. Diagonal tension web shear cracks form when the principal tensile stress reaches the direct tensile strength of the concrete. The shear stress, *v*, in a web of a beam prior to the formation of flexural cracks is given by:

$$v = \frac{V\,Q}{I\,b} \approx 1.5\frac{V}{h\,b} \qquad \text{Equation 3}$$

Where *V* is the shear force, *Q* is the first moment of area above fibre being considered about the neutral axis, *I* is the second moment of area about the neutral axis, *b* is the width of the fibre being considered and h is the overall depth of the section.

Figure 5.16: Behaviour of hollow-core floor under gravity loading

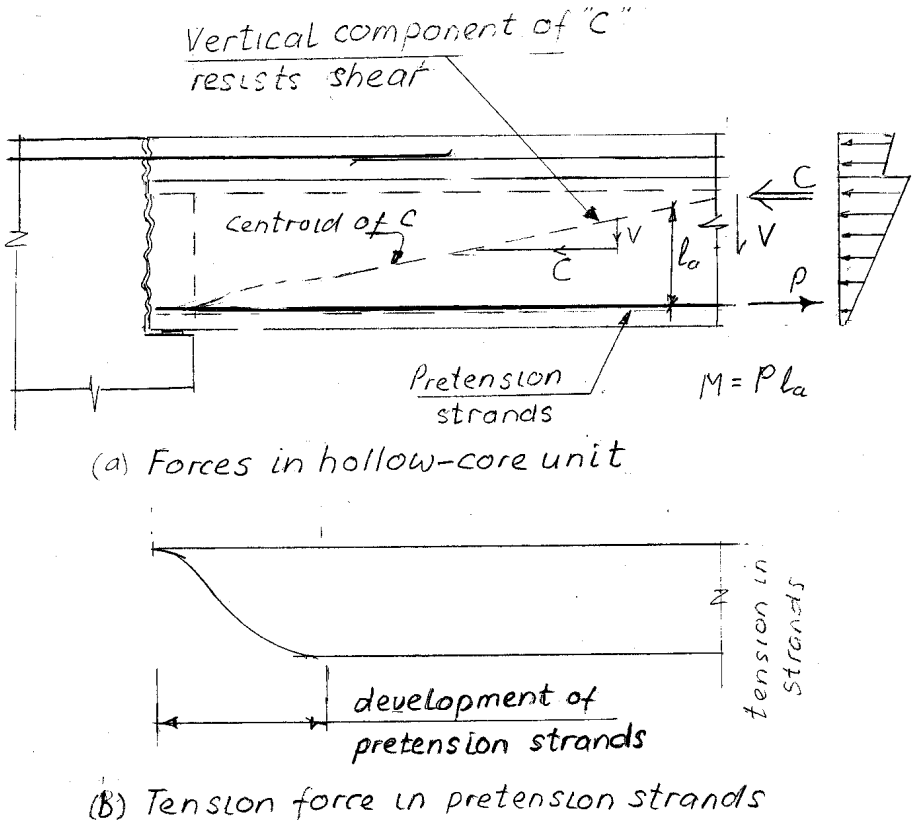

In NZS 3101-2006, the design principal tensile strength of the concrete, f_{dt}, is taken as $0.33\sqrt{f_c'}$. The magnitude of the shear stress, v_{max}, causing the principal tensile stress increases with the longitudinal compression stress, f_{lc}, and it is given by:

$$v_{\max} = f_{dt}\,(\sqrt{1 + f_{lc}/f_{dt}}) \qquad \text{Equation 4}$$

where f_{lc} is taken as positive for compression and f_{dt} is taken as positive for tension.

Making a conservative assumption that the longitudinal compression stress is zero gives a critical shear stress of $0.33\sqrt{f_c'}$ at the formation of a web shear crack. With the different 300 hollow-core sections, the minimum total web width varies, but typically it is greater than 180mm, while with the 200 mm hollow-core sections the corresponding width is greater than 240 mm. On the basis of the approximation given by Equation 3 the calculated shear sustained at diagonal web shear cracking, V_{cw}, is given by:

$$V_{cw} \approx 0.22\, b_w\, h \sqrt{f_c'} \qquad \text{Equation 5}$$

where b_w is the minimum width of the web being considered and h is the depth of the unit. Assuming the concrete strength at the critical fibre is 50 MPa and using the minimum web widths given above, the nominal shear strengths are close to 100 kN for both 300 and 200 hollow-core units with 75 mm topping. From this assessment it is concluded that shear failure due to gravity loading is not critical for the composite floor provided negative moments, which may lead to flexural cracking of the hollow-core unit, do not act.

Under seismic conditions, when flexural cracking is induced in the insitu concrete by negative bending moment regions near the supports and vertical seismic actions, flexural shear cracking becomes critical. The shear stress which may be sustained in flexural shear critical zones is generally considerable smaller than the corresponding shear stress for web shear critical zones. Consequently shear strength based on test, or calculations, for simply supported units do not apply, as they can over-estimate the strength by a considerable margin. Section 5.2.2.4 considers the shear strength in negative moment regions.

5.3.2.2 Negative moment flexural strength and ductility

Introduction

Hollow-core units have generally been designed to resist gravity loading as simply supported members. However, to allow floors to act as diaphragms starter reinforcement is placed in the insitu concrete topping to tie the floors into the supporting structural elements. This establishes continuity, which enables negative moments and axial tension to be transmitted into a floor at it supports due to:

- creep, shrinkage and thermal movements
- live loads
- lateral forces due to wind or seismic actions
- vertical seismic actions and
- elongation of beams.

Generally prior to the publication of an amendment to the New Zealand Structural Concrete Standard, NZS 3101-1995 in 2004, starter reinforcing bars, which extended between 400 to

1,500 mm into the slab [Woods 2008], were generally lapped with mesh reinforcement. The amendment required ductile reinforcement to be used in the topping concrete. From the length of the starter reinforcement that was typically used [Woods 2008] it appears that the mesh reinforcement was not designed to sustain the negative moments, which could be induced into the floor. This gives rise to the possibility of brittle negative moment failures occurring in the floor close to a support due to the low reinforcement content and non-ductile characteristics of mesh reinforcement, with the critical section being at the point where either the starter reinforcement terminated or the location where reinforcement cast into filled cells at the ends of the units terminated.

Mesh reinforcement typically has a strain at maximum stress of the order of 1.5 percent. 665 mesh, which was typically used to reinforce topping concrete, has an area of 145 mm^2 per metre and a design strength of 485 MPa. If this reinforcement is placed in a 75mm thick concrete topping the reinforcement proportion is just under 0.002 and the force that it can transmit across a crack corresponds to a stress in the insitu concrete of 0.94 MPa. As this is well below the stress level which could be expected to result in cracking of the concrete, which rules out the possibility of secondary cracks, and consequently only primary flexural tension cracks can be expected to form in a negative moment zone. In a test of a 300 hollow-core unit with 75 mm topping the spacing of cracks was found to be close to 500 mm, which is consistent with the formation of primary flexural cracks [Woods 2008].

As the critical section for negative moment flexure generally occurs at either the position where starter bars terminate, or where bars cast into filled cells at the ends of a unit terminate. This type of negative moment flexural failure has been observed in several sub-assembly tests at the University of Canterbury including those completed by Liew [2004], Bull and Matthews [2003], and Woods [2008]. The failure from Woods' test, which used 665 mesh and one metre long, HD12 starter bars at 300 centres, is shown in Figure 5.17. It can be seen in this figure that once a vertical flexural crack opened up, the 665 mesh snapped and a horizontal shear failure occurred. This crack pattern is typical the failure crack patterns observed in these tests. In the Woods test, insitu topping concrete had a crack initiated in it so that instrumentation placed across the crack. The use of a crack initiator should not have had a significant influence on flexural behaviour as had the specimen been older the topping concrete would most likely have contained cracking due to shrinkage.

Figure 5.17: Negative flexural crack at the termination point of the starter bars leading to a brittle shear failure

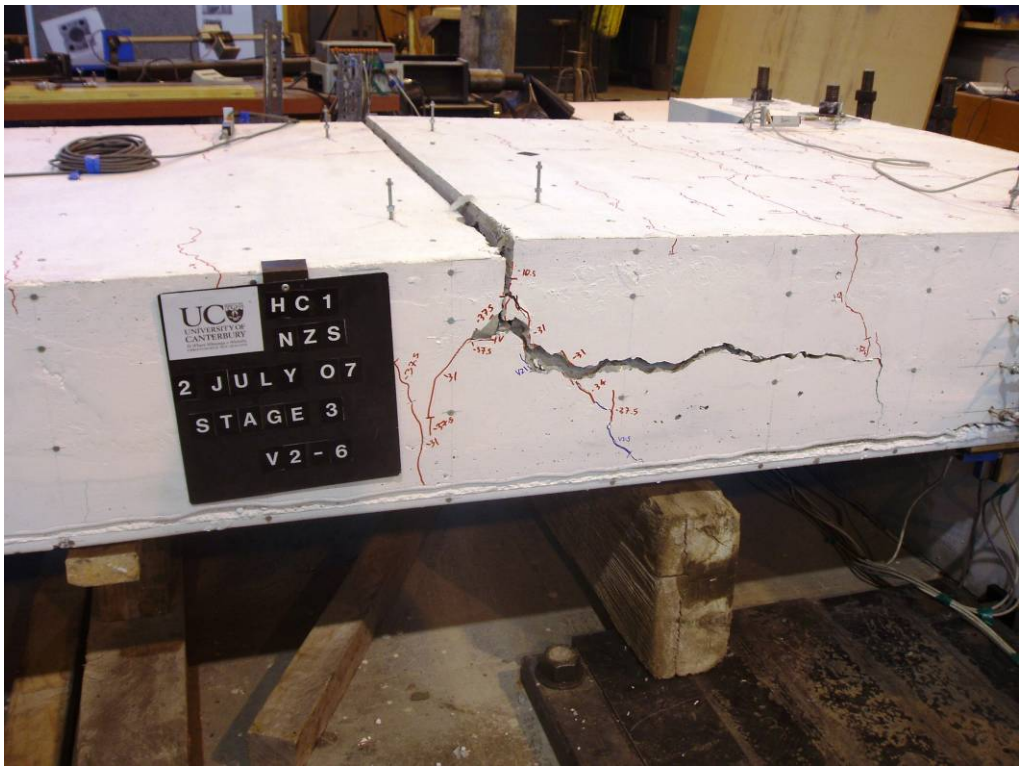

Source: Woods 2008.

Analysis

In design, or in planning a retro-fit, a capacity design approach should be taken. The critical sections of the floor in the negative moment region of the slab need to be identified and these designed to resist the maximum over-strength actions that can be induced on these sections due to gravity load and seismic actions. In this assessment the starter reinforcement above the support should be assumed to be stressed to its ultimate stress level as the crack width above the back face of the precast units can exceed 15 mm.

Hollow-core floors constructed using mesh reinforcement, short starter bars or with over-reinforced end connections are prone to a negative flexural failure. Woods [2008] has shown that the use of standard flexural theory over-estimates negative moment flexural strength. This theory has to be modified to allow for:

- the low ultimate strain capacity of mesh and
- the low reinforcement proportion of reinforcement in the insitu concrete topping.

As previously noted due to the low reinforcement proportion of negative moment reinforcement only primary flexural tension cracks may be expected to form with spacing of the order of 1 to 1.5 times the overall depth of the floor. With this wide spacing of cracks the influence of concrete strains on ultimate strength cannot be ignored.

Standard flexural theory for concrete members is based on three assumptions.

1. Plain sections in a region remain plain. It should be noted that this assumption applies to a region and not to the immediate vicinity of a single crack.
2. The strain in the reinforcement is either uniform or varies linearly over the region.
3. The stress levels in reinforcement and concrete are assumed to be uniquely related to stress, with tensile stresses in concrete being neglected.

The depth of a neutral axis in a region is a function of the average tensile strain in the reinforcement and the average compressive strain on the extreme compression fibre. However, in the flexural tension zone, due to the wide spacing of cracks and low reinforcement content, the concrete between the cracks resists a high proportion of the flexural tension force. This reduces the average tensile strain in the reinforcement, with the tensile extension of the tension zone being concentrated in the locality of the crack. To predict the actual tensile strain in the reinforcement at a crack from the average strain at the same level in the region it is necessary to multiply by a strain concentration factor.

In a test of a 300 hollow-core unit with 75 mm insitu concrete topping Woods [2008], found that the negative moment crack spacing was close 500 mm. With 665 mesh reinforcement (mesh spacing 150 mm) it was found that the strain concentration factor was close to 4. This value was predicted analytically on the basis of 500 mm crack spacing, an assumption that the mesh was effectively anchored at the positions where it was welded to transverse bars and by making an allowance for bond appropriate for plain bars cast in topping concrete. The value of 4 was supported by experimental strain and displacement measurements. Using a value of 4 for the strain concentration factor, and assuming that the ultimate limiting strain in the mesh reinforcement is 0.02, gives an average tensile strain of 0.02/4, equal to 0.005. This value of strain is used for calculating the depth of the neutral axis. With this limiting strain level, the corresponding strain and hence stress level on the extreme compression fibre is within the elastic range. Consequently the commonly used rectangular stress block assumption for concrete stresses, which is based on a strain of 0.003 in the concrete, cannot be used and the centre of compression force is located higher in the section than would be calculated from standard flexural theory. It should also be noted that the behaviour is not ductile.

The strain concentration factor of 4 was found from one test; hence it should be taken as a tentative value at this stage. For other depths of construction, the factor may be assessed as proportional to overall depth, h. Thus for other depths of hollow-core floors the strain concentration factor, S_{cf}, may be assessed from the equation:

$$S_{cf} = 4\left(375/h\right) \qquad \text{Equation 6}$$

Liew [2004] demonstrated that a section is at the end of concrete filled, reinforced cores of the units can also be critical. Where cells are filled and reinforced near the supports, the reinforcement in the cells extends between 600 mm and 1000 mm along the unit. Infilling of cores has been used as a solution for when, on site, the seating width for the unit is inadequate or when there was an attempt to place a band of addition tension capacity across a floor diaphragm. As shown by Liew this practice may have inadvertently made negative flexural failure more likely.

If the amount of reinforcing steel used across the floor-to-support beam interface is the same as that along the length of the floor, then negative flexural failure of the hollow-core unit should not be a problem unless there is a very high seismic demand.

Calculating negative flexural moment demand

At the interface between the hollow-core unit and the supporting beam, the reinforcement in the insitu concrete topping is likely to be close to its ultimate strength in a major earthquake. This is due to elongation of beams parallel to the hollow-core units and/or rotation of the seating beams associated with storey drift. The maximum negative flexure demands that need to be considered, **occurring at the same time**, are a combination of gravity loads, vertical seismic forces (up and down), together with the actions that may be transmitted through the support details from the elongation and rotation displacement. These loads are shown in Figure 5.18(a).

Figure 5.18: Bending moments and moment coverage (drawn for 12 m span, Christchurch seismic actions)

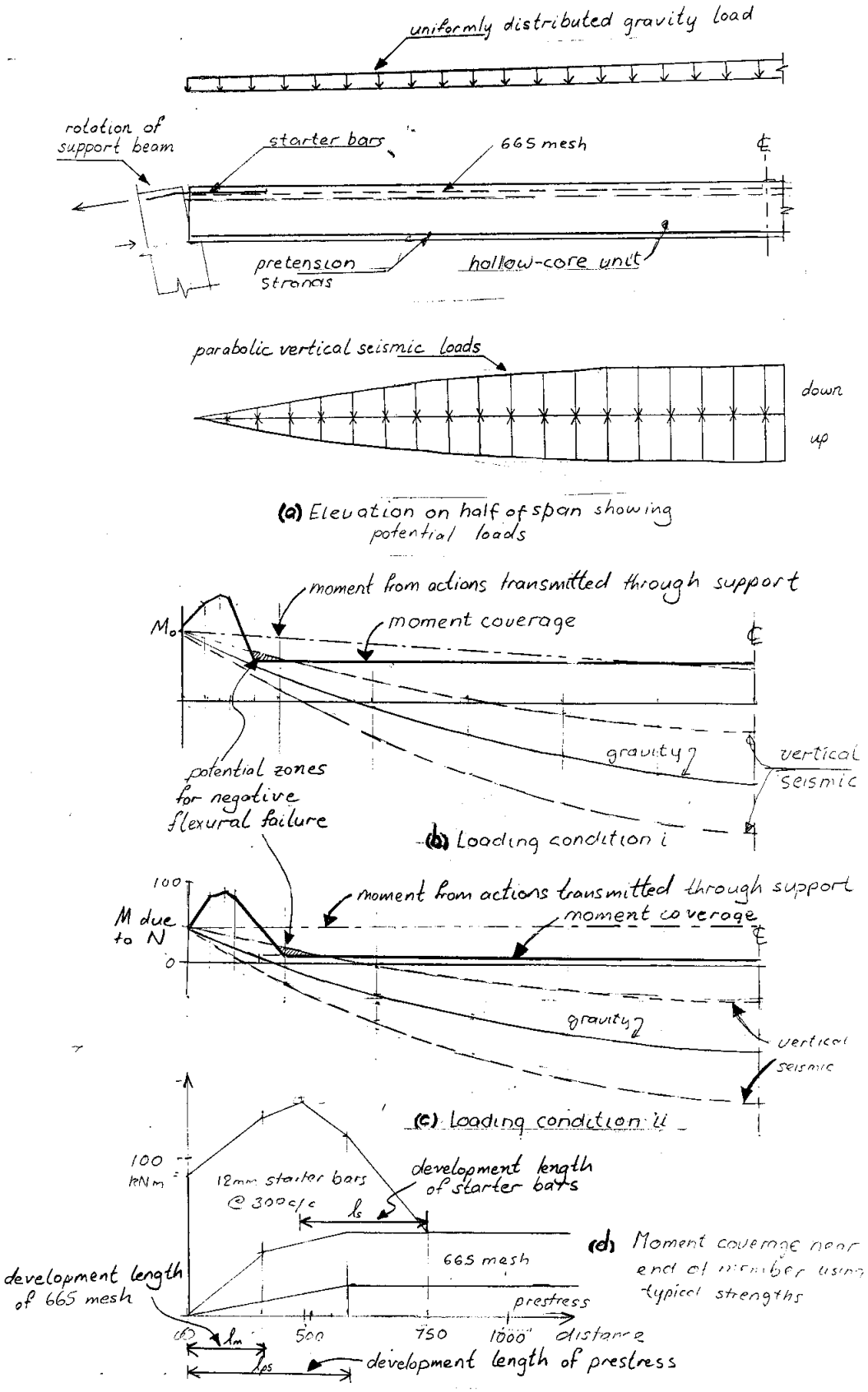

Gravity load and vertical seismic actions need to be considered with two critical moment components produced from actions transmitted to the floor through the supports,. These two components are:

- maximum bending moment with no axial load (shown in Figure 5.19(i)). In this case it can be assumed that one end of the floor is at its overstrength moment and the other is pinned (zero moment), with a linear variation of moment between the support points. The overstrength bending moment capacity at the floor end can be assessed assuming that the interface section acts as a singly reinforced concrete beam section.
- maximum axial load due to parallel beam elongation (Figure 5.19(ii)). End moments in the floor are produced by the eccentricity of the applied axial tension through the starter bars. In this scenario the end moments are generally less than the maximum bending moments, but the section capacity is reduced due to the axial tension that acts.

Figure 5.19: Critical loading conditions

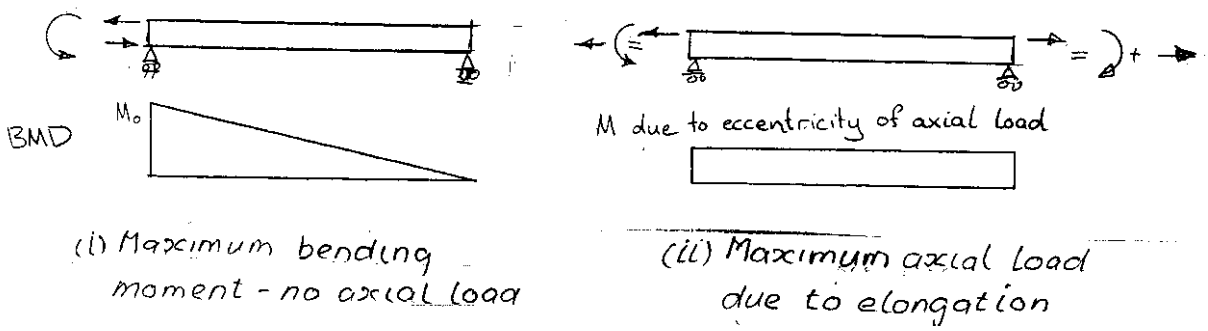

The end conditions of the floor vary considerably during an earthquake. However these two cases are thought to be representative and conservative.

From the bending moments induced by the actions at the supports are added moments due to gravity loads and moments arising from vertical seismic ground motion. These can be found from the New Zealand Loadings Code [AS/SANZ 2002-2004]. Generally the vertical seismic forces these are 0.7 times the elastic site spectra multiplied by the weight of the floor and modified to allow for an appropriate structural ductility factor. With mesh reinforcement a structural ductility factor of 1 should be used due to its brittle behaviour. Where ductile reinforcement is used over the whole surface of the floor the structural ductility factor may be increased to 2.0. These values are selected on the basis that:

- the mesh has a very low ductility
- the hollow-core units with insitu concrete topping have very different stiffness characteristics for loading in the upward and downward directions.

This difference can significantly increase the displacement induced by seismic ground motion.

The vertical seismic actions should be distributed in the shape of a parabola along the length of the floor. This distributes the load approximately proportionally with the expected deflected shape of the floor [SANZ 2004]. Negative moments induced in the hollow-core floor will be greatest under upwards vertical actions therefore the bending moments resulting from this parabolic load along the beam must be subtracted from those resulting from bending moments transmitted through the supports and gravity induced bending moments. The combined loading conditions for a 12 m span hollow-core floor under Christchurch seismic actions are shown in Figure 5.18(b) and (c).

It is conservative to assume an overstrength end moment due to elongation and rotation of the support beams together with the maximum vertical earthquake excitation. This is because the period of the floor excited by the vertical motion is short compared to the fundamental period of the structure; therefore there is the possibility the maximum moments or near maximum moments will occur simultaneously.

Conclusions

Negative moments induced by seismic actions can cause negative flexural failure in hollow-core floors. This type of failure has the potential to be **brittle** so should be avoided. Hollow-core floors which contain mesh reinforcement, filled cores or over reinforced connection details, are particularly vulnerable to this kind of failure. Standard flexural theory needs to be modified to allow for the effect of tension stiffening and limited ductility of mesh reinforcement before it can be used to assess negative moment flexural strengths of hollow-core floors.

5.3.2.3 Positive moment failure at supports

Positive moment failure mechanism

This form of failure is associated with flexural cracking close to a support, in the transfer length of the prestressed strands or wires. This form of failure arises due to the application of positive moments at the end of a hollow-core unit. It has been observed in a test of a hollow-core floor and perimeter frame [Matthews 2009] and in tests of individual hollow-core units with insitu concrete topping [Bull and Matthews 2003]. Breaking out the cells of hollow-core units near a support, adding reinforcement and filling with concrete increases the positive moment strength near the supports and prevents this form of failure. The stages leading to collapse of a hollow-core floor unit, due to the formation of a positive moment crack near a support, are illustrated in Figure 5.20. Sway of a building induces positive and negative moments in the hollow-core units at the face of supporting beams. The negative moment strength depends on the number, size and grade of starter bars linking the unit to the supporting beam. However, the positive moment strength depends on the tensile strength of the concrete in the hollow-core section. The critical section for positive moment, section 2.2 in Figure 5.20(a), is typically 60 to 80 mm from the end of the unit; consequently the pretension strands are only capable of resisting a few percent of their design force due to their short development length. Furthermore as the strands are concentrated in the webs, the little prestress that is sustained at this section does not induce significant compression into the concrete below the voids, which is up to a distance of 120 mm from the nearest strand. When the concrete below the voids cracks in tension it is unlikely that the remaining concrete can sustain the lost tension force. Consequently the positive moment flexural strength of the

hollow-core at this section depends almost entirely on the tensile strength of the concrete. When a flexural crack forms at this section the strands slip through the concrete between the end of the unit and the critical section.

There are three factors which have a major influence on the potential for a positive moment flexural crack to form at the face of a supporting beam, section 2.2 in Figure 5.20(a). These are outlined below:

1. If a crack forms between the back face of the hollow-core unit and the supporting beam, section 1.1 in Figure 5.20(a), the positive moment flexural strength of this section is reduced and this reduces the magnitude of the positive moments that may be induced at the critical section at the face of the support, section 2.2. A crack often develops at the back face of the unit due to shrinkage and creep of the hollow-core and insitu concrete topping, and/or due to differential thermal stresses between the main beams and floor. It should be noted however, that a narrow crack at the back face of the hollow-core unit does not exclude the possibility of a positive moment failure of the hollow-core unit. Narrow cracks did form in the Matthews floor test [Matthews 2004], but failure still occurred due to positive moment flexural cracking near the face of the support.
2. The use of a mortar pad between hollow-core units and their support beams increases the shear force that can be applied to the soffit of a hollow-core unit. This increases the magnitude of positive moment which may induced at the critical section at the face of the support beam. In both cases where this form of failure has been observed the units were supported on mortar. It appears that that the longitudinal shear force transmitted through the mortar pad was sufficient to initiate positive moment cracking by itself in the Matthews test as some cracking had occurred at the back face of the unit [Matthews 2004].
3. Calculations show that the higher the strength of the insitu concrete the greater the probability that a positive moment flexural crack will form at the critical section in a major earthquake.

The formation of a positive moment flexural crack near the face of the support beam creates a weak section; see Figure 5.20(b), which widens when elongation of main beams applies tension to the floor, as illustrated in Figure 5.20(c). When the crack width reaches a width if the order 1 to 2 mm shear transfer by aggregate interlock action across the crack is for practical purposes lost, and stress redistribution occurs, as shown in Figure 5.20(c). The prestress force in the strand typically develops over a distance of approximately 40 strand diameters from the crack at the face of the support. The longitudinal component of this force is balanced by the longitudinal component of the compression in the concrete. For equilibrium the vertical component of the compression force, which under positive moments is equal to the shear force, must be resisted. When the width of this crack was small a large portion of this vertical force was resisted by aggregate interlock. However, with the opening up of this crack this component is redistributed to the vertical component of tension stresses in the concrete in the webs of the hollow-core member and to a very limited extent to dowel action in the strands, see Figure 5.20(c). The proportion of shear resisted by dowel action in the strands is small as they are flexible and there is inadequate shear displacement across the crack to mobilise this action. As shown in Figure 5.20(c) near vertical tension stresses in the webs increase causing the flexural crack to extend in a near horizontal direction. With this crack extension the shear displacement across the crack at the level of the strands increases

and this allows dowel action in the strands to pick up a high proportion of the shear force. Continued elongation of the main beams results in further increase in crack width until failure occurs with the strand pulling out of the concrete. In the Matthews test of a floor slab [Matthews 2004], collapse occurred when the elongation of the end plastic hinges in the beams near the support points for the hollow-core units were of the order of 12 mm. This implies that the crack widths at the face of the support were of the order of 12 mm. In the individual units tests [Bull and Matthews 2003], the crack widths and elongation were not directly measured. However, a photographic record together with deflection measurements indicate that collapse occurred when the positive moment flexural crack were of the order of 10–15 mm in width. In these tests the effect of vertical seismic ground motion was not considered. The rapidly alternating vertical accelerations, associated with vertical ground motion, could result in failure at a reduced width of crack.

Figure 5.20: Positive moment failure of hollow-core units

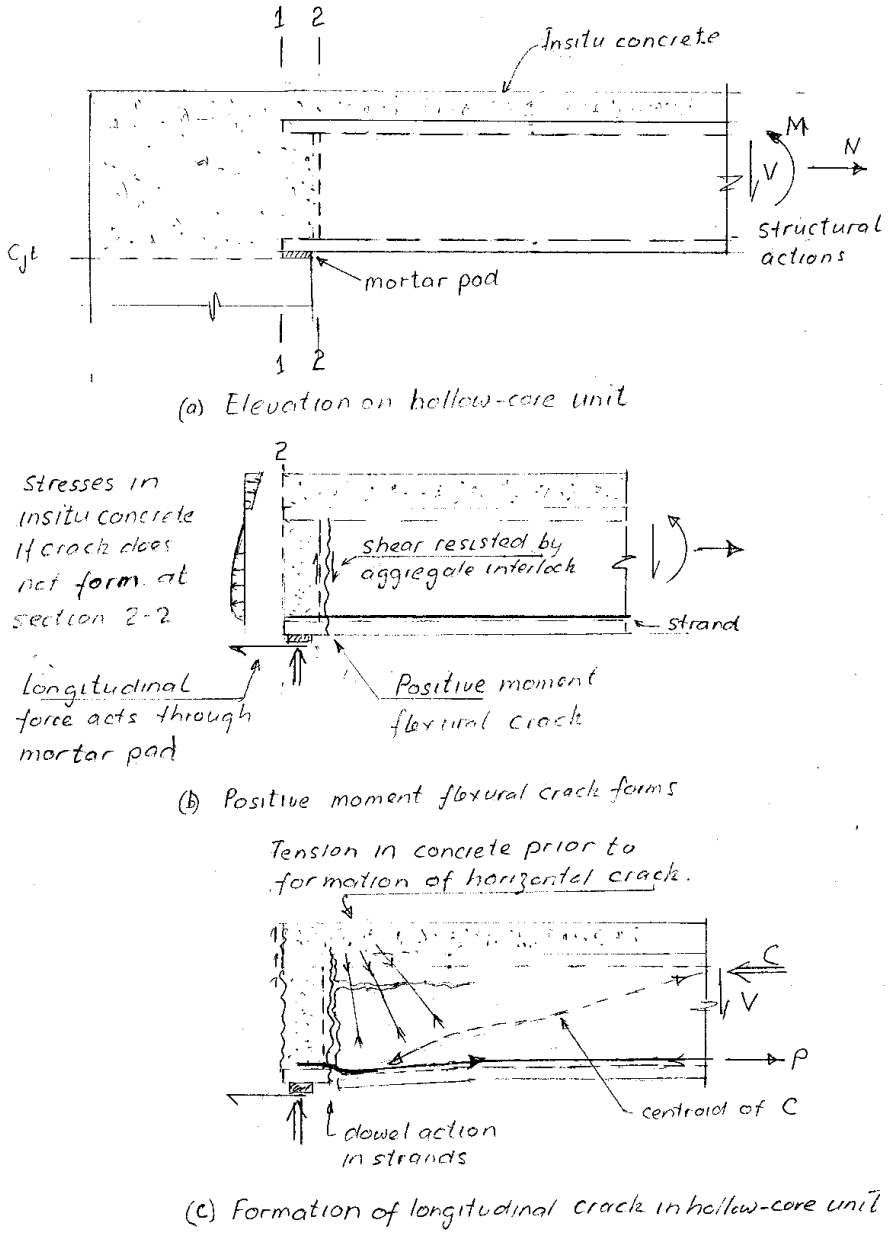

There have been no tests of the dowel capacity of strands. It is difficult to estimate the dowel capacity as this depends on the degree of composite action between the strands and concrete. However, even if the strands fail in flexure due to dowel action it is likely that wedging in the crack would prevent collapse until the crack width was of the order of the strand diameter, or the concrete surrounding the strands was extensively broken up.

There is another possible trigger for this form of failure. The 75 mm plug of concrete cast into the ends of the hollow-cores can act as a dowel. If bond between this plug and the hollow-core concrete is poor, as is often the case, the plug can only be broken by prying forces acting at the end of the plug and the back face of the hollow-core unit. The magnitude of these forces can be high and of sufficient magnitude to split the web of a hollow-core unit [Matthews 2004]. Once the horizontal web crack has formed the failure follows the mode previously described for positive moment failure.

Conclusions

Positive moment flexural cracking may be anticipated in a major earthquake in hollow-core units close to their support if either:

- they are supported on mortar and there is no evidence of the hollow-core unit slipping over the mortar
- if the insitu concrete at the back of the hollow-core unit has cylinder strength of 40 MPa or more.

Where a positive moment flexural crack forms at the face of a supporting member collapse may be expected to occur when the crack width reaches the order of 80% of the diameter of the pretension strands in the unit. This crack width can be taken as the elongation sustained in the plastic hinge in the main beam parallel to the span of the unit and located closest to the support of the hollow-core unit.

The development of a positive moment flexural crack forming in an earthquake can be ruled out if either:

- A crack with a width of 0.5 mm or more exists in the topping at the back face of the hollow-core and the unit is not supported on mortar. This indicates the infill concrete in the cores is cracked and critical positive moments can not be applied to the hollow-core at the face of the support.
- If the crack in the topping is equal to or more than 2 mm it can be assumed that slip has occurred between the hollow-core unit and the mortar pad and consequently the longitudinal shear force that can be applied through the mortar pad will be insufficient to crack the hollow-core unit.
- If cells at the end of the hollow-core have been broken out, reinforced and filled with concrete, the resultant additional positive moment strength should prevent the possibility of a positive moment failure from occurring.

5.3.2.4 Shear strength in negative moment regions

Introduction

As discussed in section 5.2.3, hollow-core units close to their supports have high shear strength when they act as simply supported beams and are subjected to gravity loads. In this situation where only low positive moments can act and there is no flexural cracking the shear strength is limited by web shear cracking. However, under seismic conditions, as illustrated in section 5.3.2.2, the starter bars can transmit both moment and axial tension to a hollow-core floor near the supports. The shear strength in the negative moment region, if it contains flexural/axial tension cracks, is limited by the flexural shear cracking strength. Hence the shear strength of this region is influenced by continuity reinforcement which ties the floor to the supporting structure.

At the back face of the hollow-core unit, wide cracks may develop in a major earthquake due to elongation of beams parallel to the precast units and the rotation of the supporting structural element (beam or wall) relative to the floor. Reinforcement crossing this crack is likely to be stressed close to its ultimate value. As shown in Figure 5.21(a), the tension force resisted by the reinforcement in the insitu concrete topping decreases as the distance of the section increases from the support. This is in part due to the decrease in bending moments and in part due to the transfer of the pretension force from the pretensioned reinforcement to the concrete. In Figure 5.21(c), the equilibrium of the concrete between the two cracks is illustrated. The change in tension force, ΔT, in the reinforcement in the topping concrete applies a shear force to the concrete. The resultant shear stress is found by dividing ΔT by the distance between the cracks, Δx, and the width of the web at the level being considered, as illustrated in Figure 5.21(c) and (d). The shear stresses in the compression zone are increased due to the inclination of the compression force along the member. However, this increase in shear stress is not critical as the longitudinal stress in this region suppresses the diagonal tensile stresses. It is the shear stresses sustained in the flexural tension zone that lead to flexural shear cracking.

Woods [2008] made a series of analyses of the hollow-core floors when subjected to gravity loads and seismic actions together with the starter reinforcement in the topping concrete stressed to its ultimate stress where it crossed the crack between the supporting beam and the back face of the hollow-core units. Analyses were made for floors with different quantities of reinforcement in the concrete topping and for two different loading conditions. In the first of these loading conditions, the rotation between the floor and supporting beam was assumed to enable the tension force resisted by the reinforcement, where it crossed the crack at the back face of the hollow-core units, to be balanced by a compression force of equal magnitude. That is the reinforcement applied a bending moment. In the second case it was assumed that elongation had displaced the hollow-core units across the supporting ledge so that the tension force resisted by the topping reinforcement could not be balanced by a compression force. In this case, the tension force applied a moment and axial tension force to the floor as the reinforcement was eccentric to the floor.

From the analyses the following conclusions were made:

1. Changing from applying a pure moment across the crack at the back face of the hollow-core units to applying an eccentric tension force (axial tension and reduced moment) in the starter reinforcement did not significantly change the shear stress levels in the flexural tension zone.
2. Increasing the amount of reinforcement in the topping concrete increased the length of floor subjected to negative moments but it did not significantly change the magnitude of the shear stresses in the flexural tension zone at the critical section of the floor. This critical section was assumed to be located at a distance of an effective depth from the edge of the support.
3. The shear stress levels in the flexural tension zone near the critical section were for practical purposes equal to those that would be sustained by a reinforced concrete beam with the same dimensions.

The conclusions from these analyses regarding shear strength in negative moment zones for hollow-core units without top strands were:

- the critical section for shear in negative moment regions should be taken at a distance of an effective depth out from the edge of the support and where cells were filled and reinforced at the end of the filled cells
- the shear strength should be calculated as for an equivalent shaped reinforced concrete section
- where a hollow-core floor with hollow-core units contain near circular voids the design shear stress limit may be increased for the reasons outlined in the following paragraph.

Due to the shape of the cross-section, the presence of some compression in the concrete from the pretensioned strands at the critical section for shear, the height of the zero strain fibre in the section is higher than would be expected in a rectangular or tee beam. This combined with the reduction in average tensile strain in the reinforcement in the topping concrete due to tension stiffening (see 5.3.2.2) results in flexural crack widths sustained at the mid depth of the hollow-core unit being appreciably less could be expected in an equivalent rectangular beam. Collins and Kuchma [1999] have shown that the shear stress that can be sustained in the flexural tension zone of a reinforced concrete beam depends on the crack width. The magnitude of shear stress that can be transmitted across a crack increases as the crack width decreases. In hollow-core sections with near circular voids, the crack widths are small where the web width is close to its minimum. Where the crack widths are greater, the web width is also greater. Consequently, taking the effective shear area as the minimum web width times the effective depth, as defined the Concrete Structures Standard, NZS 3101 [2006], a higher shear stress may be sustained than is the case with hollow-core units or other precast pretensioned floor units that have uniform web widths in their flexural tension zones.

The assessment described above has led to the design criteria for determining the design shear strength of floors containing precast units detailed in Amendment 2 to NZS 3101-2006. It may be noted that the design approach given by ***fib*** Commission 6 [2000] recommends determining the negative moment shear strength as though the critical section was not prestressed. Noting that ***fib*** Commission 6 does not consider aspects such as elongation or capacity design and it recommends details which differ considerably from New Zealand practice.

Recommendations

On the basis of recent research findings, recommendations have been included in Amendment 2 to NZS 3101-2006 on the design of precast units for shear in negative moment zones. These recommendations should be used as a basis in retro-fit analyses and for the design of new structures.

5.3.2.5 Flexural and shear actions transverse to span of hollow-core units

General

There are a number of structural situations where hollow-core floors may be subjected to bending moments, which act at right angles to the span of the units, due to either gravity loading or seismic actions. One simple case arises when concentrated loads act on a hollow-core floor. The vertical displacement under the load induces bending transverse to the span of the units. The change in transverse flexural compression force associated with the transverse moments is balanced by a corresponding change in flexural tension force. Equilibrium requires the webs to resist an out of plane shear force. These shear forces induce out of plane moments in the webs in much the same way that a Vierendeel Truss acts to resist moment and shear. Such actions may result in tensile cracking of the tension flange, which is of little consequence, or cracking of the webs, which can be very significant in that this separates the tension flange containing the main flexural tension reinforcement from its compression flange (see 5.3.2.6 and Figure 5.25). Under normal live loading conditions for buildings, the concentrated loads are of insufficient magnitude to cause this cracking. Where high concentrated loads may act, for example in bridges, it is important that the webs contain shear reinforcement to prevent this form of brittle failure.

Under seismic conditions, transverse bending can be induced in hollow-core floors supported on a beam which deforms due to bending. If the hollow-core voids at the supports are filled, to a distance of 75 mm or more, the filled cells act as a diaphragm and enables shear arising from any change in transverse moment to be transmitted to the tension zone without any Vierendeel type bending action in the webs. The ***fib*** Commission 6 [2000] contains a method of assessing these actions.

Figure 5.21: Shear stresses induced in hollow-core units

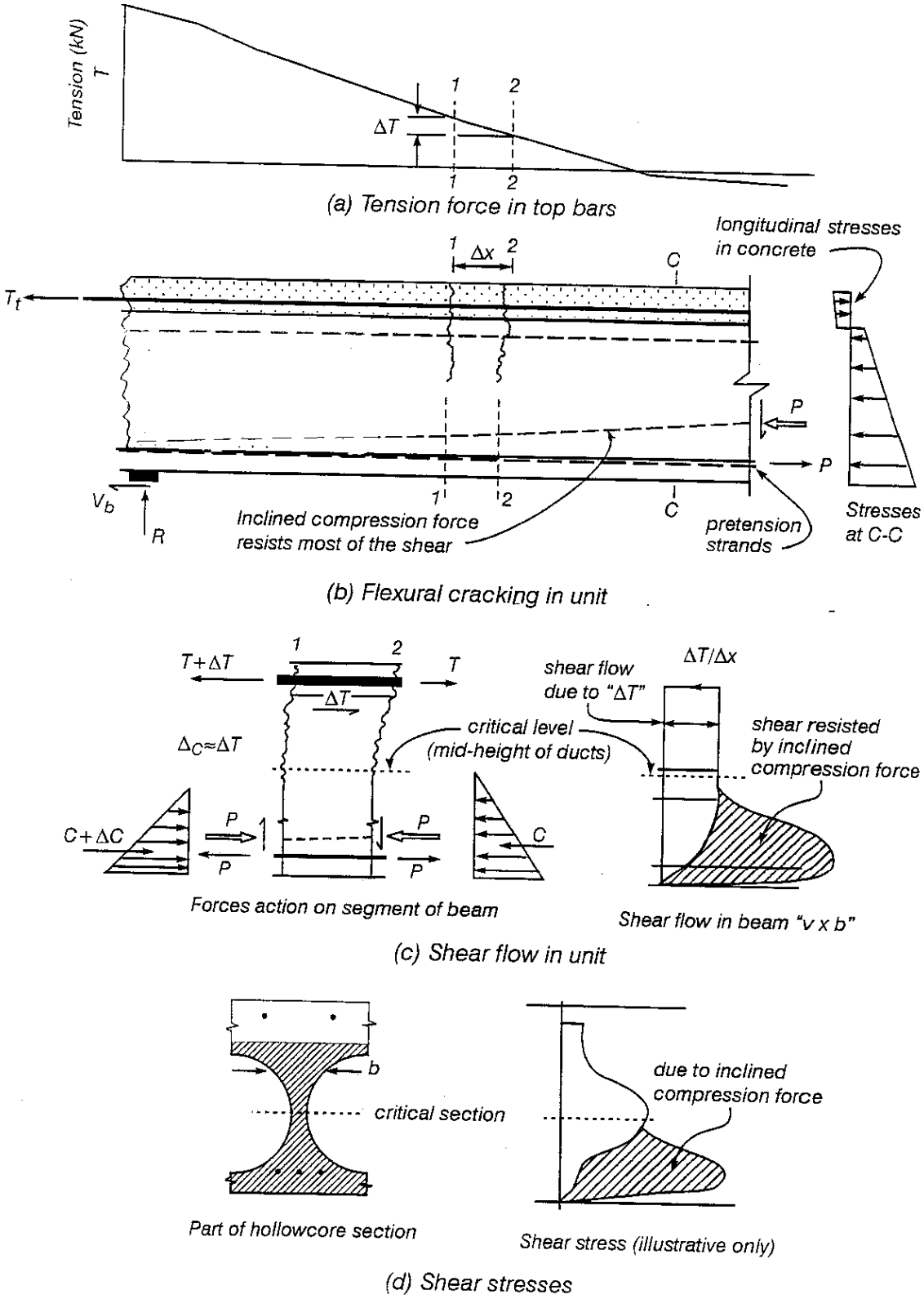

Recommendations

In buildings subjected to normal live loading, the voids in hollow-core units should be filled to a minimum distance of 75 mm from the end of the unit at support points. The filled portion of the cells can act as a diaphragm to limit local out of plane bending of webs if the supporting element deforms in flexure.

Where high concentrated loading may act on a hollow-core floor or deck slab, in a bridge, the webs should be reinforced with stirrups to prevent possible brittle failure due to out of plane bending moments and shears forces.

5.3.2.6 Failure due to incompatible displacements

General

There are a number of situations in an earthquake where appreciable differential displacement may arise between a hollow-core unit and other structural elements. Figure 5.22 illustrates two such cases. Part (a) of this figure shows a hollow-core unit adjacent to a beam. The Concrete Structures Standard [2006] (Clause 18.6.7) requires that the beam and hollow-core unit are linked by a thin slab, known as a "linking slab". This slab has a minimum clear span equal to or greater than the larger of 600 mm or six times the thickness of the linking slab. This allows differential displacement to develop between the floor and beam without endangering the hollow-core unit. Very few buildings existing in 2007 will have a flexible linking slab to connect precast floor units to beams or other structural elements (beams or walls). Consequently in planning retrofit of hollow-core floors it is essential to assess the extent of damage and danger to life due to the differential displacement a hollow-core unit and a beam, wall or other precast floor units. A structural test of a floor, carried out at the University of Canterbury, showed that a beam was cast against the side of the first hollow-core unit led to extensive cracking in the webs when the beam deformed in flexure. This web cracking separated the tension flange from its compression flange, which contributed to the premature collapse of the floor [Matthews 2004].

Part (b) of Figure 5.22 shows hollow-core units supported on adjacent pairs of walls. Seismic actions cause the walls to deform inducing relative vertical displacement between adjacent hollow-core units. A linking slab should be used in this situation to prevent damage from being induced in the precast units. Restrepo et al [2000] tested such an arrangement using 200 mm hollow-core units with insitu concrete topping, but without a linking slab. They found that extensive cracking occurred in the webs of the hollow-core units at relatively small drifts. It should be noted that in this test it was predominantly the webs that failed and there was little tension failure at the horizontal interface of the insitu concrete and hollow-core unit.

Figure 5.22: Linking slabs to accommodate incompatible displacements

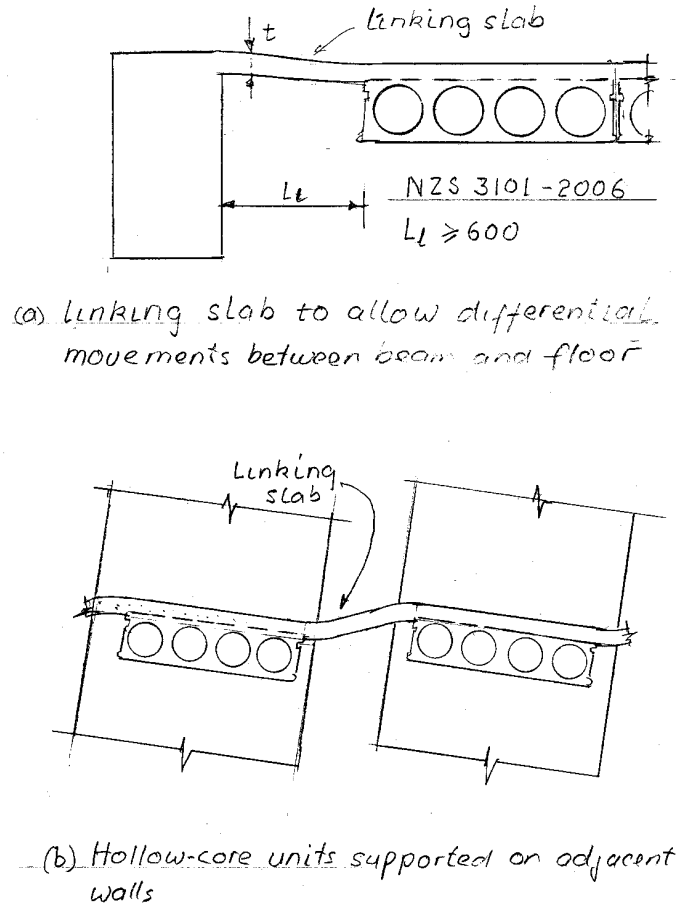

Failure mechanism and analytical model

Figure 5.23 illustrates the actions arising where differential displacement develops between a beam and adjacent hollow-core unit. These actions are complex as longitudinal flexure, shear, torsion and bending interact with flexural, shear and axial forces sustained within the section due to section distortion. To assess these actions a simple model is required, such as that shown in Figure 5.23(c). It should be noted that this model may only be used to assess the likely range of actions which may lead to failure.

Figure 5.23(a) shows the structural arrangement of a beam cast against the side of a hollow-core unit. Bending of the beam causes it to deflect relative to the floor. This causes the portion of hollow-core immediately adjacent to the beam to move vertically with it, as illustrated in Figure 5.23(b). The hollow-core units and insitu concrete topping partially restrain the vertical movement of the beam and as a result bending moments and shear forces are initiated in the concrete and reinforcement linking the beam to the hollow-core unit. A flexural crack will form in the insitu concrete topping, either at the interface to the beam, or above the first void in the hollow-core. For the purposes of analysis the crack may be assumed to develop at the interface to the beam. The compression force acting at this section is inclined, as shown in Figure 5.23(b), to resist the shear force. The magnitude of the compression force is limited by the tension force that can be resisted by the reinforcement. The line of action of the compression force is such that it passes just above the first void without causing the concrete to crush.

For the purpose of assessing the likely magnitudes of the structural actions within the section the hollow-core unit it can be broken down into a number of equivalent elements, as shown in Figure 5.23(c). The concrete above the voids and the reinforcement in the insitu concrete are assumed to act as a beam, which is supported on a number of I beams. These I beams represent the actions of the webs and the portions of top and bottom flange that acts with each web. Applying a bending moment and shear force at the interface of the insitu concrete and the beam induces the pattern of moments and shears illustrated in Figure 5.23(d) within the section. In this analysis it is assumed the web is flexible compared to the beam representing the concrete above the web. Any bending moment induced in a web would reduce strength of the web. Consequently, the analysis may give a web splitting assessment on the un-conservative side. The vertical prying forces these actions induce on the webs along a hollow-core unit as shown in Figure 5.23(e). The vertical tension or compression force acting on each web is resisted by a change in the shear force along each web. As shown in Figure 5.23(f) vertical tension or compression is induced in the critical section of the web by the component of the change in shear force sustained in the region below this section. Given the overall shape of the section this results in close to 40 percent of the prying force acting on one I beam inducing vertical tension or compression at the critical section of the web.

To assess the section, the maximum moment that can be sustained at the interface of hollow-core unit and beam is found together with the corresponding value of the maximum moment acting at the face of the second web (web B) in the of the hollow-core unit. The face of the web is assumed to be located at a distance of half the minimum web thickness from the web centreline. As the flexural stiffness of the web is considerably smaller than the stiffness of the top slab the bending moments on both sides of the web may be assumed to be equal to each other (this is an approximation). The bending moment is multiplied by a carry over factor, which may be taken as 0.4, to find the bending moment at the face of the next web, and so on. From these values the shear forces resisted by the slab can be found and this gives the reactions, or prying forces, acting against the webs. Cracking of this web is assumed to occur when the principal tensile stresses in the critical section of the web reaches the direct tensile strength of the concrete. If the calculated critical tensile stress exceeds the direct tensile strength the actions are scaled back to give a direct tensile strength equal to the desired value. Having found the actions which cause the second crack to form one can now look at the conditions in the next web. The corresponding structural actions are found following the same process used in the first analysis except that the particular 'I' beam representing the cracked web is removed from the analytical model.

In analyses for longitudinal cracking in the webs, due to incompatible displacements between a beam and a floor, it was found the shear force induced by the prying forces has a major influence on the magnitude of the principal tensile stresses in a web; see Figure 5.3(e). The value of this shear force depends on the length and distribution of prying forces along the hollow-core unit. Unfortunately there has been no research, either experimental or analytical, which indicates how the prying forces and resultant shears are distributed along a hollow-core web member. This distribution depends on the relative flexural and torsional stiffness of the beam and hollow-core units and on the level of inelastic deformation sustained by plastic regions in the beam. Clearly the magnitude and distribution of differential displacement between the floor and beam increases with the inelastic deformation sustained by the beam. This is an area which requires research.

Figure 5.23: Analytical model for assessing damage due to incompatible displacements in web B

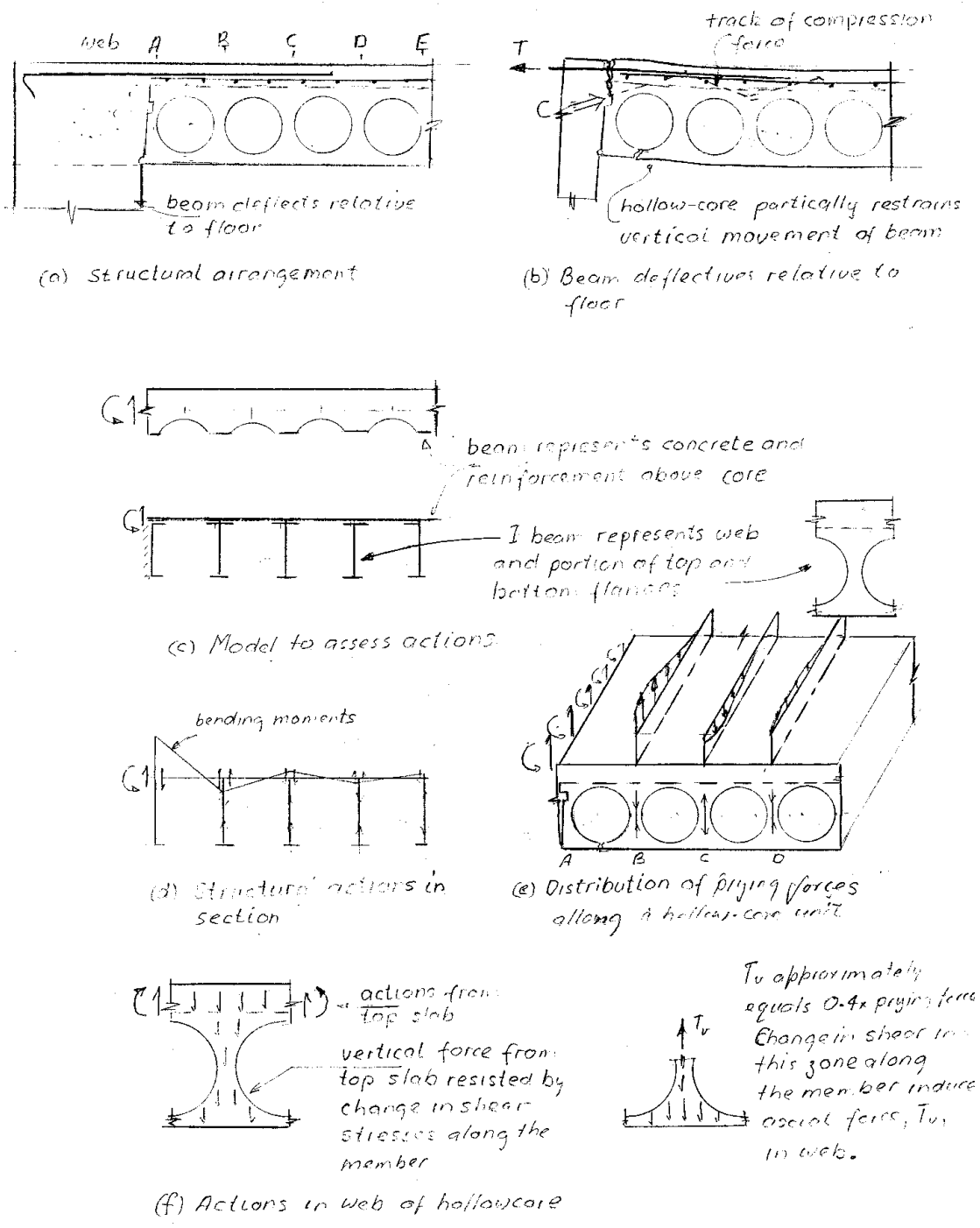

Unless subjected to more detailed analysis it is recommended that the critical shear force from the prying forces is calculated assuming the local shear in a web is taken as the prying force times the overall depth of the beam. This value could be un-conservative and this needs to be born in mind when considering the results of such as assessment.

As noted in section 5.3.5.3, it is important to adopt an appropriate value for the direct tensile strength of concrete. In assessment for retrofit or design this value should be equal to or less than the lower characteristic strength times a strength reduction factor (= 0.6). However, in many cases, due to the possibility of a progressive failure a lower value should be used. When comparing experimental observations with predicted performance the average tensile strength of concrete should be used.

The difference in deflection between a beam and a web is a critical value in assessment for web splitting. For webs located within 6 times the depth of concrete above the voids the tension stress in the reinforcement is likely to be close to constant between the critical sections as it is unlikely the high bond stresses implied by conventional flexural theory could be resisted. With a constant, or near constant stress in the tension reinforcement, the changing moment along the beam would be to a large extent be carried by the diagonal trajectory of the compression force, as illustrated in Figure 5.23(b). Over most of the length of the diagonal compression force, the compression stresses would be small and consequently any shortening of this diagonal can be ignored. On this basis the deflection of web can be calculated by geometry from the extension of the reinforcement between the web and the beam and the angle of inclination of the diagonal compression force. When the distance between the beam and web being considered exceeds six times the thickness of the concrete above the voids, flexural theory is likely to be more appropriate for calculating load deformation characteristics.

Example of assessment failure of webs

Figure 5.24(a) shows reinforced concrete beam cast against the side of a 300 deep hollow-core unit ("Stress-core") with a 75 mm thick insitu concrete topping. The compression strength of the insitu concrete is assumed to be 30 MPa. The topping is reinforced with 12 mm Grade 430 starter bars at 300 mm centres and with 665 mesh, which stops just short of the face of the beam. The 12 mm bars extend 750 mm over the hollow-core unit. The concrete in the hollow-core unit is assumed to have a compressive strength of 50 MPa. The following analysis is made as for a comparison with test observations and consequently the tensile strength of the concrete is taken as the average value as given in Table 5.4. As noted in the previous section a much lower value of tensile strength should be used for a design or retrofit assessment. For the purposes of this assessment the maximum stress levels in the 12 mm bars and 665 mesh are taken as 515 and 610 MPa respectively. These values are in line with the values which could be anticipated from the Matthews diaphragm test [2004].

The concrete in the beam is cast against web A and hence this web cannot fail. Step one of the assessment is to see if a longitudinal crack will form in web B. This might occur if the maximum bending moment that can be sustained develops in the insitu concrete topping at both the face of the beam A, and at the face of the web B. The beam rising relative to the floor, as shown in Figure 5.24(a), might induce such bending moments. The line of action of the compression force passes a few millimetres above the first void, as shown in Figure 5.24(b). At section B-B, the centre of the compression force is about 6 mm below the top surface of the concrete. Both the critical positions of the compression force are assessed on the basis of the standard rectangular stress block used for ultimate strength design. This defines the line of action of the compression force as indicated in Figure 5.24(b). The maximum bending moments at sections 1-1 and 2-2 are 20 and 9 kNm/m run, respectively. As these sections are 279 mm apart a shear force of 104 kN/m can be sustained. A bending

moment of close to 9 kNm/m is induced on the right hand side of web B and a moment of close to 3.6 kNm/m is carried over to web C. The carry over factor for this case is of the order of 0.4. Given the approximations there is no point in trying to refine the values further. From these moments and a distance of 254 mm between the faces of webs B and C the shear is approximately 50 kN/m. These values are shown in Figure 5.24(c). The resultant axial force (tension in this case) acting on the 'I' beam representing web B is 154 kN/m. Of this value approximately 40 percent is sustained by a vertical tension force in the web at its thinnest section close to mid height of the voids. This gives a tensile stress of the order of 1.62 MPa (see Figure 5.23(f)). The shear force acting in the web due to the prying force of 154 kN/m is taken as the beam depth (0.8 m) times the prying force, which is equal to 123 kN. From Equation 3, the shear stress, v, is of the order of 13 MPa. To this should be added the shear stress due to gravity loads, which will be in the range of 0.5 to 1 MPa, but acting in the opposite direction to the shear due to prying loads (1 MPa assumed in this case).

To find the principal tensile stress the longitudinal, vertical stresses and shear stress are required. In this assessment the longitudinal stress, due primarily to prestress, is taken as 7 MPa. In practice it may vary appreciable due to prestress in the member, loading on the floor, elongation of the beam and creep and shrinkage characteristics of the beam, topping concrete and hollow-core unit etc. Using the standard equations for principal stresses, f_p, are given by:

$$f_p = \left(\frac{f_l + f_v}{2}\right) \pm \sqrt{\left(\frac{f_l - f_v}{2}\right)^2 + v^2} \qquad \text{Equation 7}$$

Where f_l and f_v are the longitudinal and vertical stresses and v is the shear stress. In the case being considered, the principal tensile stress in the concrete at the critical section of the web is found to be 10 MPa in tension and 15.4 MPa in compression. Hence, as the average tensile strength of the concrete is 4.1 MPa, it is very likely that this web will split. Multiplying the stresses induced by the prying forces by 0.58 brings the principal tensile stress back to 4.1 MPa and the corresponding average stress in the reinforcement is of the order of 278 MPa. This stress in the longitudinal reinforcement can now be used to assess the relative deflection between the face of the beam and web B.

Figure 5.24: Example of analysis for web cracking associated with incompatible displacement

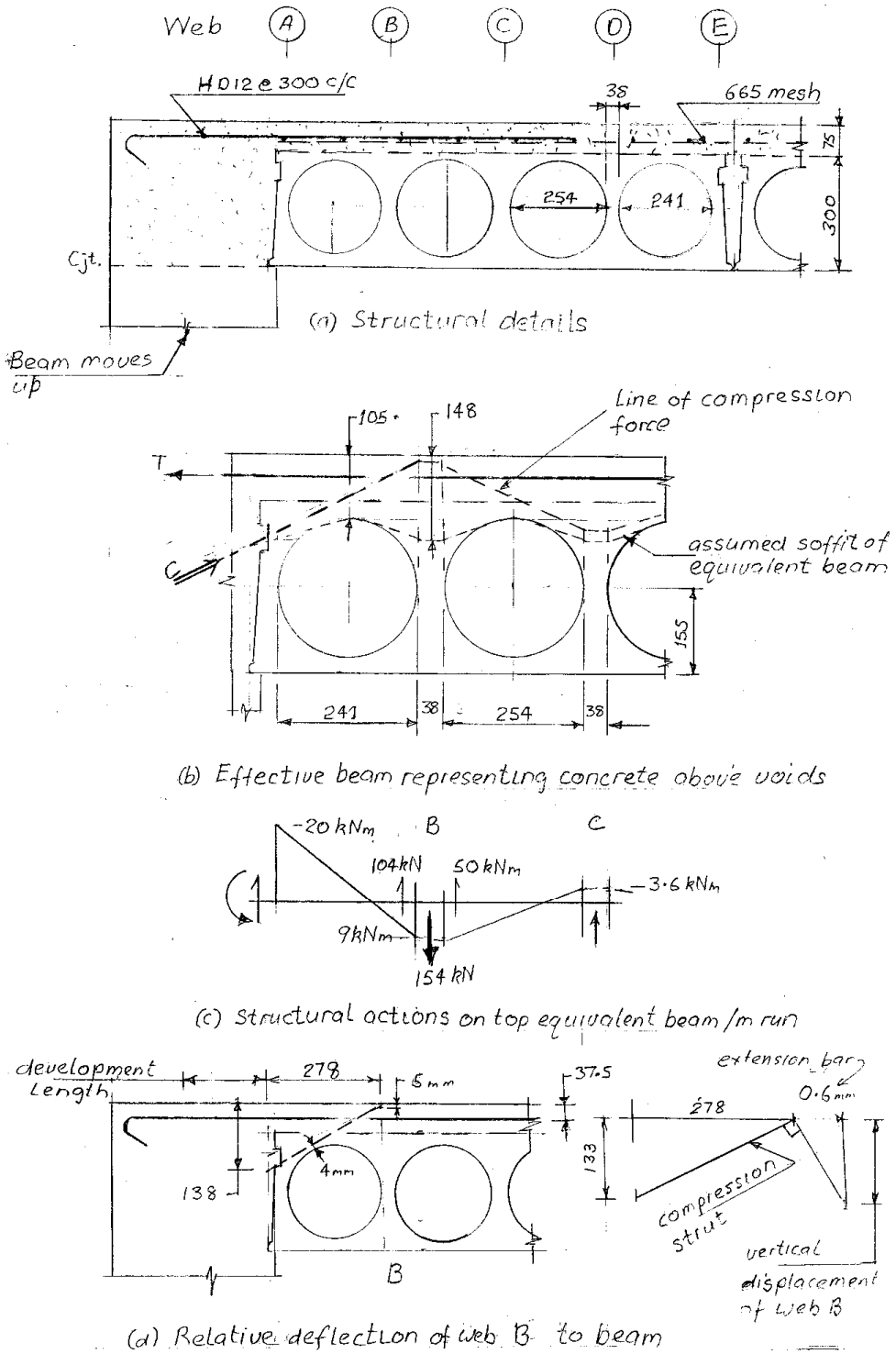

The extension of the reinforcement between the side of the beam and web B must include the extension arising from development of the bars in the beam. The development lengths given by the Standard, NZS3101 [2006] are design values and hence conservative. A more realistic value (and a conservative value for this case) is given by using 2/3 of the design length. For a stress level of 278 MPa, this length is 265 mm. The extension of the 12 mm bars and 665 mesh between the end of their development point in the beam and the web B is found by multiplying the strain corresponding to the average stress by the distance between section A-A and B-B plus half the development length. As indicated in Figure 5.24(d), this value is 0.6 mm and from this the relative vertical displacement can be assessed as 1.34 mm, see Figure 5.24(d). However, given all the approximations involved in this assessment the likely range is of the order of two-thirds to twice this value, that is 0.9 to 2.7 mm.

The process can be repeated for web C, ignoring web B as it has been separated from the remainder of the hollow-core, and then for web D ignoring webs B and C. The result of these calculations are summarised in Table 5.2 for the cases where the beam deflects both up and down relative to the floor. Again it must be noted that this is an assessment only. The magnitude of the principal tension is strongly dependant on the distribution of prying forces along the hollow-core unit. As noted previously in this assessment the critical shear in a web has been taken as the prying force times the depth of the beam. However, more work is required to obtain a better method of establishing the critical shear force.

Table 5.2: Assessment summary of example of web cracking due to incompatible deflections between floor and beam

Beam movement	Web fails at differential deflection between web and beam				Comments
	A	B	C	D	
Moves up	1 to 3 mm	5 to 18 mm	N F* $^{\phi}$8 to 25 mm	N F N F	$^{\phi}$ Failure occurs only if 12 mm bars extended
Moves down	0.5 to 2 mm	2.5 to 8 mm	N F $^{\phi}$7 to 24 mm	N F	$^{\phi}$ Failure occurs only if 12 mm bars extended

* N F assessment indicates failure does not occur.

Conclusions

1. A method of assessing web cracking due to incompatible displacements between a beam, or other structural element and a floor is given. It should be noted that this method is tentative, which should indicate the range of differential displacements that is likely to cause web splitting. More research is required to establish the distribution of prying forces and the local shear forces in a web along a hollow-core unit.
2. Where a beam is cast against the side of a hollow-core unit the vertical movement of the beam in the elastic range can be expected to split any webs located within a distance of 450 mm of the side of the beam.
3. In assessing the significance of web cracking on seismic performance it is necessary to assess if this cracking can lead to collapse of the hollow-core unit below the web cracks, or if the top slab has sufficient strength to prevent collapse under seismic and gravity loading.

4. The form of web cracking predicted by the method of assessment was seen in the Matthews frame floor test [2004]. The pictures in Figure 5.25 show web splitting observed during a test where the beam was cast against the side of a hollow-core unit and the top portion of a hollow-core unit after the remainder has collapsed.

Figure 5.25: Web splitting during test

(a)

(b)

(c)

Source: Matthews 2004.

5.3.2.7 Torsional failure of hollow-core units

General

There are a number of situations where torsional actions may be applied to hollow-core units due to either differential rotation of supports or differential displacements between a hollow-core unit and an adjacent structural member.

There have been few tests of torsional flexibility of hollow-core sections, either with or without topping concrete. Theoretical estimates can be made of the torsional cracking moment. However, this depends on the longitudinal compression stress acting at the critical point in a critical section, which may be located anywhere along the member or around the perimeter. The longitudinal stress depends on the prestress and on the bending moment, which varies continuously during an earthquake. Consequently for practical purposes the conditions leading to torsional cracking can only be assessed to be in a likely range of structural actions. It should be noted that hollow-core units have no torsional reinforcement and consequently when torsional cracking occurs, torsional resistance decreases.

In rectangular, Tee and L beams without torsional reinforcement this cracking could be expected to result in collapse. However, in a hollow-core section, due to the inherent redundancy in the section, a limited level of cracking in torsion would probably not result in collapse, but result in a redistribution of actions. There is limited experimental evidence to support this [Broo et al 2005, 2007]. In two tests, members sustained deflections of between two and four times the displacement corresponding to torsional cracking before complete failure occurred. Torsional behaviour of hollow-core sections is complex and it needs further study.

In analyses for torsion, it is assumed that a torsional shear flow can develop round a section as illustrated in Figure 5.26(a). When a beam supporting hollow-core units is subjected to negative bending, longitudinal cracks may be expected to form in the hollow-core below the voids, as illustrated in Figure 5.26(b). Such cracking reduces the torsional stiffness, though a shear flow may still be sustained by shear transfer across the cracks by aggregate interlock action. In extreme cases, where wide cracks form, the unit could effectively be divided into a series of I beams linked through the insitu concrete topping.

Stiffness and strength assessments

The torsional strength and stiffness prior to cracking is based on thin tube theory [Collins and Mitchell 1987; SANZ 2006]. The thickness of the tube is taken as the smaller of the wall thickness or 0.75 times to area contained within the perimeter of the section, A_c, divided by the perimeter, p_c, which is given by $0.75\,A_c / p_c$ [SANZ 2006].

For hollow-core sections, the thickness of the walls varies along the sides. Typically the thinnest portion in the soffit slab and exterior webs is of the order of 30 mm. However, the average, or effective thickness for stiffness calculations would be higher than this. For the purpose of assessing torsional performance the critical thickness of the soffit slab and the external webs has been taken as 30 mm for strength calculations and 40 mm for stiffness calculations. For the top of the hollow-core and insitu concrete, the effective tube thickness is given by 0.75 A_c/p_c. For the 300 hollow-core with 75 mm topping concrete the effective thickness is close to 100°mm while for the corresponding 200 hollow-core it is close to 80 mm.

Figure 5.26: Torsion in hollow-core members

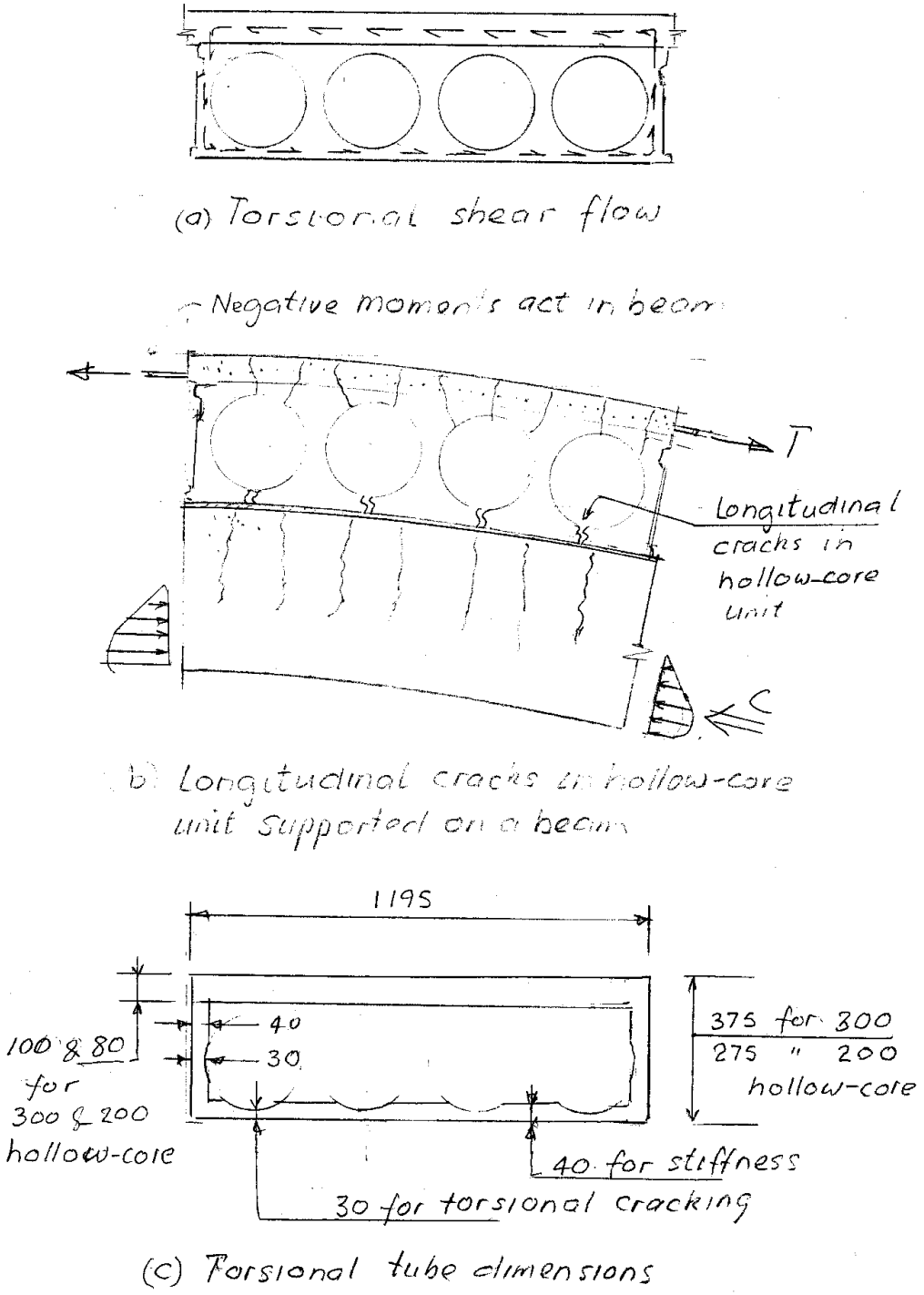

The torsional shear stress causing cracking, v_t, is based on the value sustained when the principal tensile stress in the concrete, f_{dt}, is equal to the tensile strength of the concrete. On this basis the limiting shear stress is given by:

$$v_t = f_{dt}\sqrt{1 + f_{lc}/f_{dt}} \qquad \text{Equation 8}$$

where f_{lc} is the longitudinal stress compression in the concrete at the point in the section being considered. As noted in section 5.2.5.3, the direct tensile strength varies considerable. The CEB-FIP Model code [1990] gives an average value of tensile strength of $1.4\sqrt[2/3]{f_c'/10}$ with the lower characteristic value being 0.68 times this value and the upper characteristic strength being 1.32 times this value.

The effective torsional thin wall section for hollow-core with 75 mm topping concrete is shown in Figure 5.26(c). The concrete strength for the hollow-core has been taken as 50 MPa and for the insitu concrete as 30 MPa. The longitudinal stress at the critical position in the critical section has assumed to be in the range of 0.0 to 7.0 MPa with the torsional strengths and twists being worked out for critical longitudinal stress levels of 0.0, 3.5, and 7.0 MPa. The design strengths are based on lower characteristic strengths, which are taken as 0.68 times the average strength, and the values are further multiplied by a strength reduction factor of 0.6.

Table 5.4 gives the results of calculations, based on thin tube theory (ignoring section distortion), for the average and design strengths of 300 and 200 hollow-core members with 75 mm of insitu-concrete topping. The values are indicative only as effective longitudinal compression stresses at the critical positions in the critical section have been assumed to be those listed in the table. Any interaction with shear has been neglected. The table lists the theoretical twist sustained at the onset of torsional cracking. This was based on the assumption that the tensile strength of the concrete is the **average** value. For comparison, the design strength is also listed.

Table 5.4: Strength and torsional deformation of 300 and 200 hollow-core units with 75 mm topping concrete

Item	300 hollow-core			200 hollow-core		
Longitudinal compression, f_{lc} (MPa)	0.0	3.5	7.0	0.0	3.5	7.0
Torsional shear stress at cracking, v_t, (MPa)	4.1	5.58	6.75	4.1	5.4	6.75
Average torsional cracking moment, (kNm)	86	117	142	61	83	100
Design torsional strength, (kNm)	35	48	58	25	34	41
Twist/m at torsional cracking based on average tensile strength (radians)	0.84×10^{-3}	1.14×10^{-3}	1.38×10^{-3}	2.3×10^{-3}	3.7×10^{-3}	4.7×10^{-3}

Conclusions

There is a need for research to establish the maximum torsional rotation that can be sustained by hollow-core floor slabs without either serious loss in flexural and shear strength or collapse occurring. From the limited test results sighted in the literature and from the analyses described above, it is suggested that the **safe** twist per m length of hollow-core floor with insitu concrete topping should be less than 0.001 radians per metre for 300 hollow-core and 0.002 radians per metre for 200 mm hollow-core units. With a 300 hollow-core floor with 75 mm topping spanning 12 m this would give a limiting twist of 0.012 radians or a differential deflection across the precast unit width of 1,200 mm of 15 mm in the design ultimate load condition.

5.3.3 Diaphragm action

Consider the following mechanisms that could affect diaphragm capability:

- Overstressing of the floor system when subjected to displacements from the main structural elements to which the floor is connected (beams, columns, walls, steel bracing).
- Failure / lack of ductility of topping reinforcement.
- Loss of compressive stress load paths due to localised damage resulting from significant cracks forming in the diaphragms.
- Failure of the linking slab (5.3.2.6) between the main beam and adjacent hollow-core unit due to differential elongation, vertical displacements and shear transfer.

5.3.3.1 Diaphragm action

The floor units and topping are part of the overall structural system and as such they are relied upon to maintain the integrity of the building structure. In particular, the floor must continue to act as a diaphragm and to provide adequate restraint to the columns at all floor levels.

Importantly, it is generally recognised that there is a higher degree of integrity in an in-situ concrete floor than in a precast concrete floor, with the significant discontinuities of structure in these floors.

Earthquake movements can reduce the diaphragm and column tie-back performance and need to be accounted for in design and assessment of performance.

5.3.3.2 Potential loss of lateral load paths through the floor diaphragms

Gap between the floor and supports

Gaps up to 40 mm can be formed by the elongation mechanism between the end of the floor and the face of the support, as described in the section 5.3.5.4.

Compression load paths are lost. Therefore, the traditional method of using columns as the nodes of the “Strut & Tie” model for transferring forces through and out of the floor diaphragms and in to the vertical lateral force resisting structures (as described in NZS 3101:2006) cannot apply.

The region of floor around columns in conventional reinforced concrete frames may be severely damaged due to plastic hinge formation in the adjacent beams. This further aggravates the loss of compression load path to the columns. Referring to section 5.3.5.4 and Figure 5.27 the main areas of concern are the corner columns. If the intermediate columns have either secondary beams framing in to the sides of the columns or reinforced tie zones restraining the column in to the floor, then it may be assumed that there is some ability for the compression stress fields to arrive at those columns.

The ability to transfer compression forces to or near columns is a matter of judgement and assessment of this need to consider the degree of damage around the columns and the sizes of gaps or cracks in the vicinity of the columns, including the effect on plastic hinge zones adjacent to the columns when the secondary frames undergo plastic actions due to bi-directional loading.

Where the gaps are sufficiently large (15 mm or so – see section 5.3.1.5) the starter/continuity bars in the topping can rupture and the tension capacity of that section of floor is negated. In some cases where delamination occurs, there is a low probability of rupture of the starter bars. This is due to the strain in the bars being accommodated over 300 mm to 1200 mm of delaminated topping, rather than being concentrated at one large crack (regions of delamination are discussed in section 5.3.5.2).

Figure 5.27: Loss and maintenance of columns as "nodes"

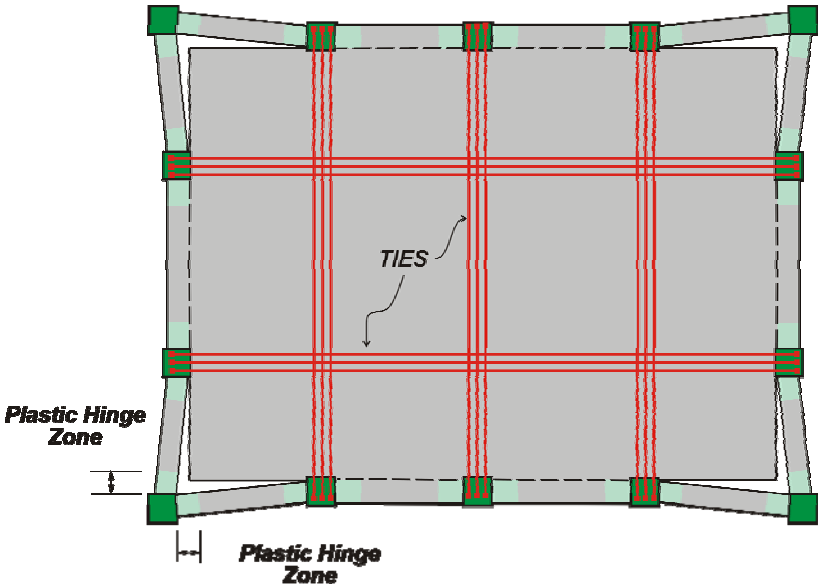

Source: Bull 2005.

5.3.4 Structure restraint

5.3.4.1 Insufficient tie-backs to columns to achieve stability

There is the risk of columns (concrete and steel) disconnecting from the floor plates because of the severe localised damage that can occur at columns with adjacent beams undergoing plastic rotations. Should this disconnection occur, the effected column can buckle between the floors to which the column remains connected. The potential for buckling of the columns gets worse when the disconnection occurs over an increasing number of floors.

Section 5.3.5.4 describes how beam elongation can damage the floor-to-column connect. Figure 5.27 shows a recommendation for new buildings where the columns are tied in to the diaphragms. Restraint of columns is assumed when either or both secondary beams are framing in to the sides of the columns or reinforced tie zones restraining the column in to the floor.

For the restraint of each column to be effective, the strength of the restraint needs to be:

- for a concrete column, 5% of the maximum axial load at that floor level [SANZ 2006]
- for a steel column, 2.5% of the maximum axial load at that floor level [SANZ 1997].

For buildings with cold drawn wire mesh as diaphragm reinforcement, which is lapped to conventional mild steel, Matthews [2004] found that the typically brittle mesh fractured at the junction of the first and second hollow-core units. Up until this investigation, it was commonly held that the distributed starter bars out of the beam, lapped with the diaphragm mesh, either side of the column of interest, was sufficient to restrain the column. Probably, this is not a reliable detail for restraint of columns.

5.3.5 General demand considerations

5.3.5.1 Cut-outs and penetrations

The hollow-core unit may be cut to allow access for services or to avoid a clash of the unit and other structural elements such as a column, see Figure 5.28.

These are actions and may not be carried out without the knowledge of precaster, structural engineer or main contractor. Often holes are cut after the building is occupied (changes of use).

Simplistically, it can be assumed that for every web or group of strands cut that the flexural capacity of the floor is reduced in portion to the number of strands cut. The shear capacity of the modified section should be determined according to section 5.3.1.8, where loss of support of a web(s) is considered.

When significant modification of a unit occurs, redistribution of gravity loads to other members or floor units is required – advice from the precast manufacturer should be sought.

Figure 5.28: Examples of "cut-outs" in hollow-core units

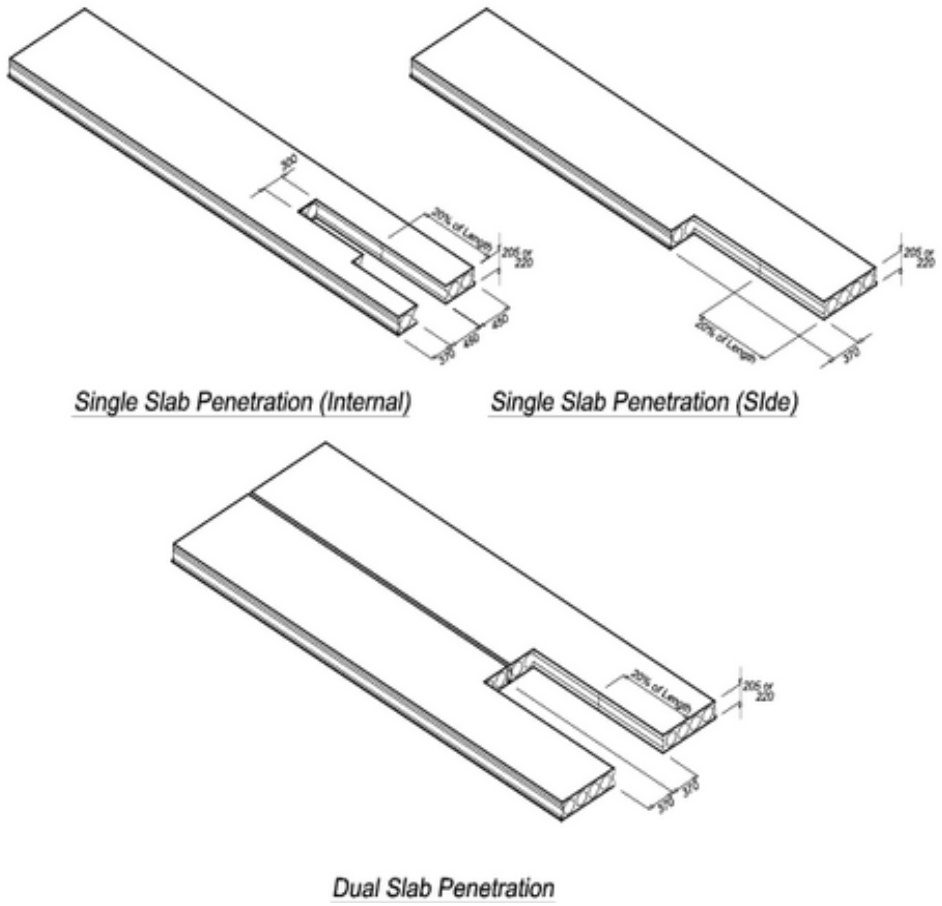

Source: Firth Industries.

5.3.5.2 Delamination of the insitu concrete topping

In the three full-scale experimental programmes [Matthews 2004, MacPherson 2005, Lindsay 2004], it was observed that the topping concrete gradually delaminated from the top of the hollow-core units – see Figure 5.29. There appears to be insufficient bond between the cast-in-place topping and the precast units to transfer the forces generated by the actions of the neighbouring beams and starter bars undergoing significant tension strains. The debonding of the topping is localised and restricted to the ends of most units.

Current New Zealand construction practice does not normally use aids to bind the topping to the units – not practical and too costly.

Loss of bond in these localised areas should not detrimentally affect the gravity carrying capacity of the floor system. As can be seen in Figure 5.29, the majority of the composite action is still intact, even after large imposed drifts during the testing.

If the vertical cracks through the delaminated topping are sufficiently small (less than 1 mm in width) then compression stresses can be assumed to be maintained. Tension fields (reinforcing bars) will function through delaminated topping, up to the capacity of the bars or that of the anchorage of the bars in that vicinity.

Figure 5.29: Mapping of the delamination of the topping from the hollow-core unit during the experimental programme

(a) Delamination map after completion of the +2.0% and -2.5% drift cycles [Matthews 2004]

(b) Delamination map after completion of the +2.0% and -2.0% drift cycles [MacPherson, 2005]

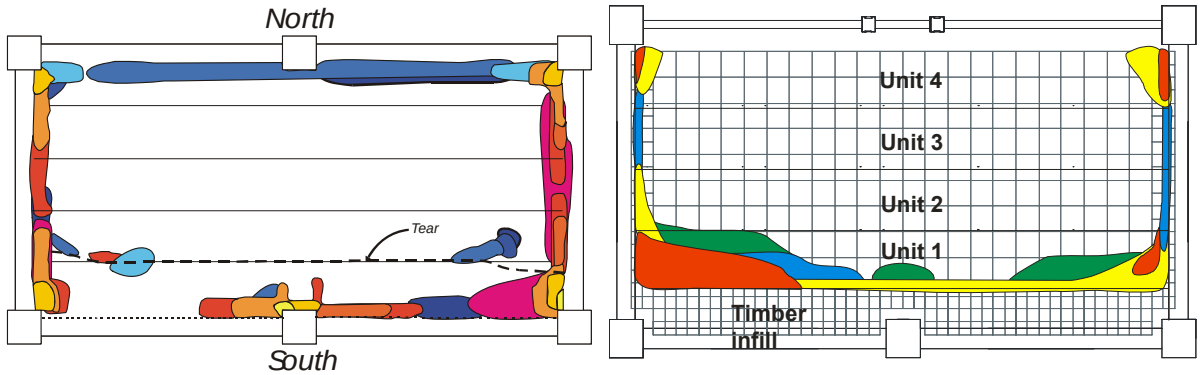

5.3.5.3 Tensile strength of concrete

In assessing the appropriate value for the tensile strength of concrete to use in a design or retrofit assessment of a hollow-core floor it is essential that the difference between the direct tensile strength and flexural tensile strength (also known as modulus of rupture) is recognised. The flexural tensile strength of concrete is found from standard shaped specimens, which have a width of 100 mm and a depth of 100 mm. The direct tensile is seldom measured as it is difficult to apply a direct uniform stress to a test specimen. The splitting tensile strength (Brazilian test) is found by applying compression across the diameter of standard cylinders (100 or 150 mm in diameter). Both the flexural tensile strength and the splitting strength are calculated from test measurements on the assumption that the stress strain behaviour of concrete in tension is linear up to the point where failure occurs. However, this assumption is not correct, as some non-linearity occurs prior to cracking and even when cracks have formed some tensile resistance remains as some hydrated cement crystals can span crack widths of the order of 0.2 mm [CEB-FIP 1990, Gopalaratham and Shah 1985]. The direct tensile strength is of the order of 60 percent of the modulus of rupture found from measurements made on standard shaped specimens and 90 percent of the splitting strength (Brazilian test). The flexural strength varies with the size of the member. With a 2 m deep member, the flexural tensile strength approaches the direct tensile strength, while the corresponding value for a 100 mm rectangular section is approximately 1.6 times the direct tensile strength. Many factors influence the tensile strength of concrete. However, most codes of practice only recognise the influence of the cylinder strength. Other factors include the aggregate grading and aggregate type, admixtures, the direction of tensile stress relative to direction of casting and the length of members or region of member subjected to tension.

Tensile stresses can be induced in members due to self strain actions, such as differential temperature conditions or differential shrinkage and creep of concrete. Where the strength of a member depends on the tensile strength it is essential to make allowance for possible adverse effects due to self strain actions.

Typical values of direct tensile strength, f_{dt}, are given below. These values are based on the recommendations contained in the CEB-FIP Model Code [1990] and some are contained in the commentary to NZS 3101 [2006]. To obtain the flexural tensile strength (modulus of rupture) some allowance should be made for non-linear behaviour of the concrete in tension. To allow for this effect the flexural tensile strength may be taken as the product of the direct tensile strength and a factor which varies with depth and shape of section.

When the extreme tension fibre is in the insitu concrete topping on a hollow-core unit the shape of the flexural tension zone is similar to that of a rectangular beam. Consequently the factor relating the modulus of rupture to the direct tensile strength can be taken from the literature [CEB-FIP 1990]. For this case with a 300 mm hollow-core member with 75 mm of topping concrete, the flexural tensile stresses at failure can be taken as 1.27 times the corresponding value of direct tensile strength. When the flexural tension is on the bottom surface, the concrete below the voids resists a high proportion of the flexural tension force. For this situation, very limited stress redistribution can occur when the concrete enters the non-linear range and consequently the modulus of rupture is close to the direct tensile strength. It is suggested for this situation the flexural tensile strength is take as 1.05 times the corresponding direct tensile strength.

Table 5.5: Limiting direct tensile stresses, f_{dt}

Cylinder strength (MPa)	Tensile strength for bending – average, upper and lower characteristic values (MPa)		
	Average	Upper	Lower
30	2.9	3.84	1.98
50	4.1	5.40	2.78

In selecting the appropriate value of tensile strength to be used in an assessment it is important to consider the following points:

- In some situations the failure of a unit can lead to collapse. The weight of this falling material is likely to lead to a progressive collapse of all the floors below this unit.
- Several of the assessment approaches given in this report are based on limited experimental and analytical research. Several of them can only be used to indicate the likely order of critical conditions for the loading situation being considered.
- In practice critical tensile stresses would be induced by a combination of actions rather than the single situation being addressed. For example in 5.3.2.6, a method of assessing splitting of webs due to incompatible displacements between a beam and a floor is given. However, in this case additional stresses may be induced at the critical sections due to: differential temperature, differential shrinkage and creep of concrete, stresses induced due to elongation of the beam, torsion in the hollow-core unit and local bending and shear due to point loads acting on the floor.
- Site inspection shows that many hollow-core units contain significant cracking before they are built into a structure and consequently their tensile strength at some critical sections may be in doubt.

To be consistent with the Loadings Standard, AS/NZS 1170 [2002-2004] and the Concrete Structures Standard, NZS 3101 [2006], the design tensile strength should be based on the ***lower characteristic strength*** and it should be used with a ***strength reduction factor*** of ***0.6***.

5.3.5.4 Beam elongation in earthquakes

Elastic and plastic rotations in beams parallel to the span of the floor units will cause elongation of the beams. This in turn pushes the element providing support to the floor away from the floor. The "element" can be a beam, edge of a column or face of a wall.

Simulated seismic loading on three full-scale, three-dimensional reinforced concrete frames [Matthews 2004, MacPherson 2005, Lindsay 2004] have shown that the supporting beams are translated as near-rigid bodies away from the floor – see Figure 5.30(b). The movement of the support from the floor can be over the entire length of the support. This is a function of the structural layout of that part of the structure and where elongation occurs. The mode described in Figure 5.30(a) was not observed in the three programmes.

Figure 5.30: Possible deformation modes caused by beam elongation

(a) Mode 1-Beam plastic hinge rotates to allow for beam elongation

(b) Mode 2-Entire beam rotates to allow for beam elongation

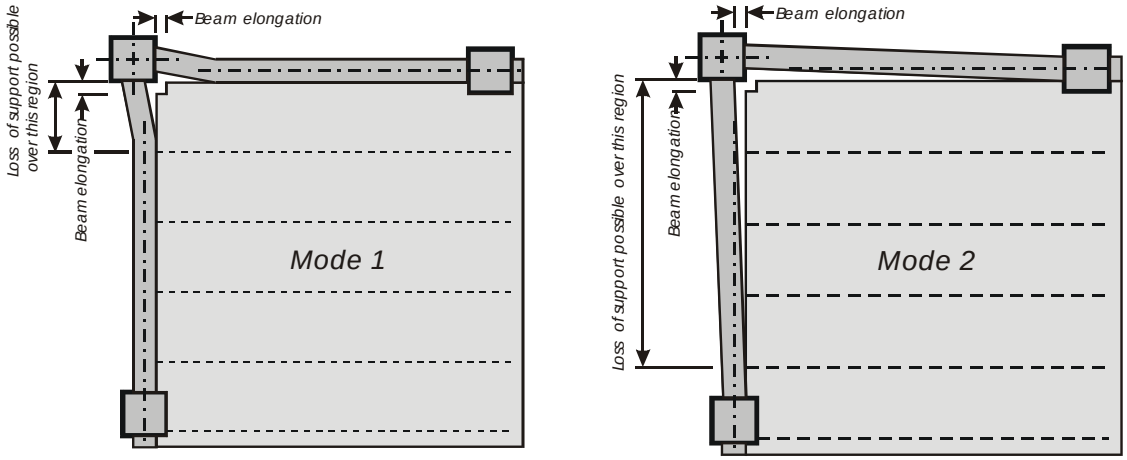

Source: Matthews 2004, MacPherson 2005, Lindsay 2004.

Recommendations for estimating the amount of elongation in beams, as a function of inter-storey drift and plastic hinge locations with respect to the structural configuration, are presented in the following section.

Background

Reinforced concrete beams, slabs, wall and columns with light axial load ratios $(N^*/A_g f N_c)$ increase in length, or elongate, when flexural cracks form. This occurs as the magnitude of the strain in the flexural tension reinforcement is greater than the corresponding strain in the extreme fibre of the compression zone and this causes the fibre at mid-depth to increase in length. The magnitude of this elongation increases very significantly when plastic hinges form.

The mechanisms causing elongation are described in references [Fenwick and Megget 1993, 1988]. Two forms of plastic hinge can be induced in concrete structures, namely unidirectional and reversing plastic hinges. The former occurs in gravity dominated beams, where two positive moment plastic hinges form in the span of the beam and two negative moment plastic hinges form against the column faces. With reversing plastic hinges both negative and positive inelastic rotations are sustained in the same location and there are only two plastic hinges. For this case, the magnitude of inelastic rotation can be assessed from the inter-storey drift [Fenwick et al 1999]. However, with unidirectional plastic hinges there is no simple relationship. For this situation maximum curvatures can be assessed from references [Fenwick et al 1999, SANZ 2004]. If the inelastic rotation imposed on unidirectional plastic hinges in a beam is known the elongation can be accurately predicted by standard flexural theory [Fenwick and Megget 1988, Fenwick and Davidson 1993].

For reversing plastic hinges elongation occurs as a result of both positive and negative inelastic rotations acing together with their associated shear forces. The elongation that is sustained at any stage depends on the loading history. In particular, the maximum elongation that occurs is smaller in earthquake records in which the maximum displacement occurs early in the record than is the where the maximum displacement is sustained towards the end of the record.

Several different method of assessing elongation in plastic hinges have been proposed [Matthews 2004, Lee and Watanabe 2003, Restrepo-Posada 1993]. However, all contain empirical coefficients which limit their use. None are suitable for inclusion in an analysis package. An analytical model, which shows promise [Peng et al 2007], is being developed for use with a computer analysis package. However, it is not currently (early 2009) available for use. It is hoped that this model can be run in the near future to obtain statistical data relating elongation to rotation demand and design ductility levels. Until such information is available, recourse is made to the results of tests on cantilever beams and structural frame assemblages.

Experimental measurements of elongation

Figure 5.31 shows plots of elongation versus inter-storey drift for a number of different structural situations. This figure only gives results for reversing plastic hinges. The results shown in this figure have been obtained from tests in which gradually increasing cycles of near equal magnitudes of positive and negative displacement have been applied to the beam or structural sub-assembly. This form of displacement history tends to maximise the elongation that is induced, hence elongation values based on these values will, in general, be conservative. However, it should also be recalled that the design drifts and inter-storey displacements specified in the Loadings Standard, NZS 1170.5 [SANZ 2004], are not peak values that may be expected in a design level earthquake, but a value expected to be sustained several times during the earthquake. The S_p factor, in effect, reduces the design values to S_p times the value predicted by the widely accepted equal displacement concept. The value of S_p, or its equivalent in earlier codes of practice, is equal to 0.7 for the 2004 Earthquake Loadings Standard, 2/3 for the 1992 Earthquake Loadings Standard and 0.55 for the 1976 and 1984 Earthquake Loadings codes. In assessment for retrofit, it is important to consider the peak displacement or drift. On this basis it considered realistic to use the conservative peak elongation values based on experimental results noting that this conservatism is balanced by a lack of conservatism in peak drift values calculated from the Earthquake Loadings Standard [SANZ 2004].

Figure 5.31: Elongation versus drift for different types of plastic hinge

(a) Elongation measurements in beams

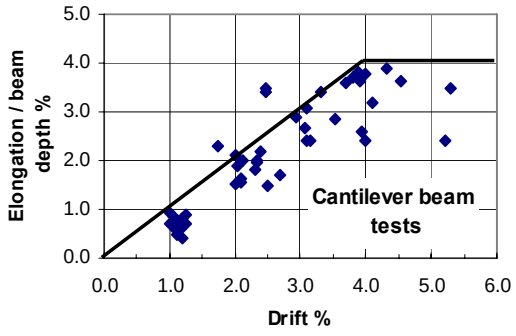

(b) Elongation measurements in type E plastic hinges

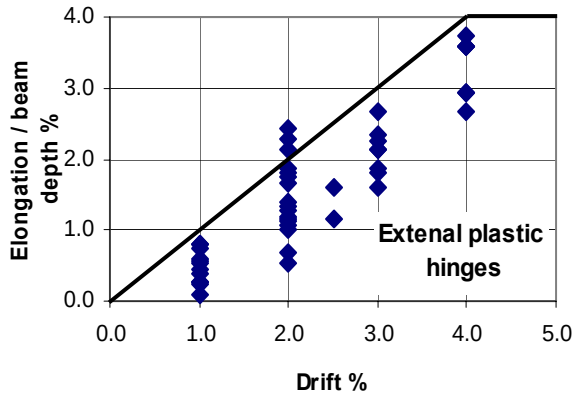

(c) Elongation measurements in type U plastic hinges

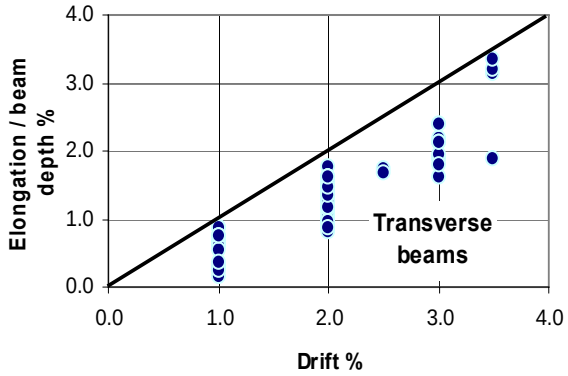

(d) Elongation measurements in type C-1 plastic hinges

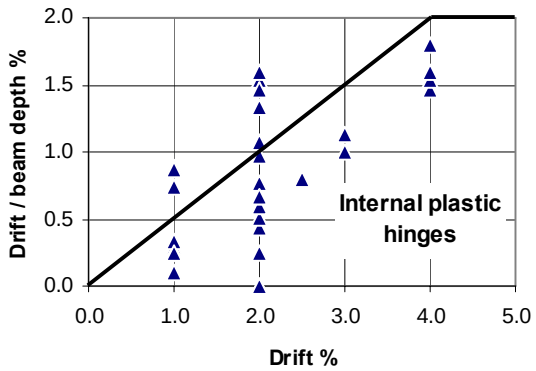

Recommendations for assessing elongation demand in plastic hinges

Figure 5.32 shows potential plastic hinges, labelled as U, E, C1 or C2 on a floor plan. The label varies with the extent that prestressed floor units can restrain elongation in plastic hinges. Tests on Tee beams have shown that normal reinforcement in a slab does not significantly influence elongation [Fenwick et al 1981, 1995]. However, prestressed reinforcement in precast floor units spanning parallel to beams does provide restraint to elongation.

The potential plastic hinges marked U are located in beams which support precast floor units. As the prestress is at right angles to these members essentially no restraint is provided to elongation in these plastic hinges.

The potential plastic hinges marked E are located against external columns in beams, which are parallel to the precast units. As the plastic hinge is located close to the support point of the precast units, the prestress in the floor unit provides only limited restraint to elongation.

Potential plastic hinges marked as C-1 are located in beams against columns where the precast prestressed floor units span directly past the column. In this situation the prestressed units provide very significant restraint to elongation and associated with this is a very substantial increase in flexural strength, which if neglected in design may lead to the formation of a column sway mechanism in a major earthquake rather than the intended ductile beam mechanism [Fenwick et al 2005, 2006; Lau 2007]. The Concrete Structures Standard [2006] contains a method of assessing the over-strength of the plastic hinges in this situation.

Figure 5.32: Different designations of potential reversing plastic hinges

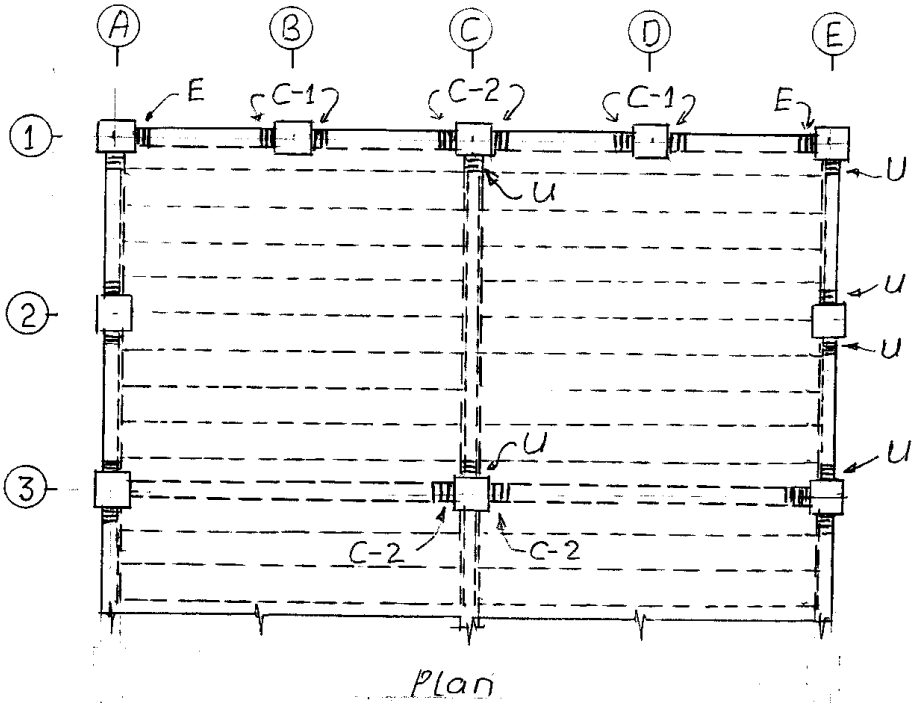

The potential plastic hinge zones marked as C-2 are located against a column where there is a transverse beam or beams framing into a column. A key feature with these is that there are precast floor units supported by the transverse beam or beams on both sides of the beam. Elongation of the C-2 type plastic hinges causes wide cracks to develop between the supporting (transverse) beam and the end of the precast floor units. The prestress units tie the bay in which they are located together so that the floor in the bay acts as a deep beam. The bending strength arising from the deep beam action confines elongation in the C-2 plastic hinges, greatly increasing their strength [Fenwick et al 2005, Lau 2007, Lau and Fenwick 2001]. There is a lack of direct experimental measurement of elongation in plastic hinges for this situation, but given the observed level of confinement and resultant strength enhancement, it is likely the elongation values would be similar to those for the C-1 plastic hinges.

Figure 5.31(a) shows elongation measurements made on cantilever beams [Fenwick et al 1981, Fenwick and Fong 1979]. The elongation is plotted against the deflection of the beams at the load point divided by the distance between springing and load point. In these tests there was no restraint to elongation. The tests included beams with different reinforcement proportions on the top than on the bottom and in addition the results from a Tee beam have been included in the test data. It can be seen that elongation was generally less than the ratio of deflection to span times the beam depth with an upper limit of 0.04 times the beam depth.

Figure 5.31(c) shows the elongation recorded in plastic hinges in the transverse beams in the frame diaphragm tests carried out at Canterbury [Matthews 2004, MacPherson 2005, Lindsay 2004]. It can be seen that the drift elongation values are very similar to those obtained in the cantilever beam tests. For these plastic hinges the assessed elongation, δ_l, for retrofit purposes may be taken from Equation 9:

$$\delta_l = R\,h \leq 0.04h \qquad \text{Equation 9}$$

where R is the ratio of inter-storey drift to storey height and *h* is the overall depth of the beam.

Figure 5.31(b) shows of elongation measurements made in the same series of tests for the type E plastic hinges. It can be seen the elongation versus drift ratio values are very similar to the type U beams. Consequently the assessed elongation in potential plastic hinges can be taken from Equation 9.

The corresponding elongation measurements from these tests for the type C-1 plastic hinges are shown in Figure 5.31(d). For the sub-assembly frame floor tests carried out by Matthews [2004] and Lindsay [2004] the elongation was less than half the values given by Equation 9. It is believed the Matthews test is likely to be more representative of existing structures than that tested by MacPherson [2005]. Consequently for this location of potential plastic hinge it is recommended the assessed elongation demand, δ_l, be taken as:

$$\delta_l = 0.5\,R\,h \leq 0.02h \qquad \text{Equation 10}$$

There is little information on potential plastic hinges marked C-2 in Figure 5.32. In view of the lack of experimental measurements it is recommended that elongation demand be assumed to be midway between that given by equations 9 and 10, hence δ_l is given by:

$$\delta_l = 0.75\,R\,h \leq 0.03h \qquad \text{Equation 11}$$

5.4 References

AS/SANZ, 2002 to 2004. *Structural Design Actions: AS/NZS 1170 – Parts 0, 1, 2 and 3.*

Broo H, Lundgren K, Engstöm B, 2005. *Shear and Torsion Interaction in Prestressed Hollow-core Units*. Magazine of Concrete Research 57(9): November, pp 521–533.

Broo H, Lundgren K, Engstöm B, 2007. *Shear and Torsion in Hollow-core Units: Finite element analyses of full scale tests*. Structural Concrete 8(2): 87–100.

Bull D, Matthews J, 2003. *Proof of Concept Tests for Hollow-core Floor Unit Connections*. Commercial Report, C2003-1, Civil Engineering, University of Canterbury, New Zealand.

Bull DK, 2005. *Suspended Floors and Diaphragm Action*. In Proceedings, "Precast Concrete Design Seminar", Cement & Concrete Association of NZ and Precast NZ, Wellington, May.

Collins MP, Kuchma D, 1999. *How Safe Are Our Lightly Reinforced Concrete Beams, Slabs and Footing?* ACI Structural Journal 96(4): July–August, pp 482–490.

Collins MP, Mitchell D, 1987. *Prestressed Concrete Basics*. Canadian Prestressed Concrete Institute, Ottawa, Canada.

Comite Euro-international du Beton and Federation Internationale de la Preconstrainte, 1993. *CEB – FIP Model Code 1990/ Design Code, 1990*. T Telford, London, pp 437.

Fenwick R, Bull D, MacPherson C, Lindsay R, 2006. *The Influence of Diaphragms on Strength of Beams*. NZSEE Conference, Napier, March, Paper No. 21.

Fenwick R, Deam B, Bull D, 2004. *Failure Modes for Hollow-core Flooring Units*. SESOC Journal 17(1): April, pp 52–70.

Fenwick RC, Davidson BJ, 1993. *Elongation in Ductile Seismic Resistance Reinforced Concrete Frames*. Paulay Symposium, ACI Special publication SP-157, pp 141–168.

Fenwick RC, Davidson BJ, Lau DBN, 2005. *Interaction Between Ductile RC Perimeter Frames and Floor Slabs Containing Precast Units*. NZSEE Conference, Wairekei, March, Paper No. 23.

Fenwick RC, Davidson BJ, McBride A, 1995. *The Influence of Slabs on Elongation in Ductile Seismic Resistant Frames*. Proceedings NZNSEE Technical Conference on Earthquake Engineering, April, pp 36–43.

Fenwick RC, Dely R, Davidson BJ, 1999. *Ductility Demand for Uni-directional and Reversing Plastic Hinges in Ductile Moment Resisting Frames*. Bulletin of NZ National Society for Earthquake Engineering 32(1): March, pp 1–12.

Fenwick RC, Fong A, 1979. *Behaviour of Reinforced Concrete Beams under Cyclic Loading*. University of Auckland, Department of Civil Engineering, Research Report No. 176, December, p 49.

Fenwick RC, Megget LM, 1993. *Elongation and Load Deflection Characteristics of Reinforced Concrete Members Containing Plastic Hinges*. Bulletin NZ National Society for Earthquake Engineering 26(1): March, pp 28–41.

Fenwick RC, Tankat AT, Thom CW, 1981. *The Deformation of Reinforced Concrete Beams Subjected to Inelastic Cyclic Loading – Experimental Results*. University of Auckland, School of Engineering Report No. 268, October, p 72.

FIB Commission 6, 2000. *Special Design Considerations for Precast Prestressed Hollow-core Floors*. Published Federationn internationale du beton, Lausanne, Switzerland.

Gopalaratnam VS, Shah SP, 1985. *Softening Response of Plain Concrete in Direct Tension*. Journal of American Concrete Institute 82 (May–June): 310–323.

Jensen JP, Bull DK, Pampanin S, 2007. *Experimental Investigation of Existing Hollow-core Seating Connection Seismic Behaviour Pre and Post Retrofit Intervention*. In Proceedings,

New Zealand Society for Earthquake Engineering Conference, Palmerston North, New Zealand.

Lau D, Fenwick R, 2001. *Influence of Precast Prestressed Flooring Components on the Seismic Performance of Reinforced Concrete Perimeter Frames*. Journal of Structural Engineering Society of New Zealand 14(2): September, pp 22–28.

Lau DBN, 2007. *Influence of Precast Prestressed Flooring on Seismic Performance of Reinforced Concrete Perimeter Frame Buildings*. PhD thesis, Civil and Environmental Engineering, University of Auckland, April, pp 368.

Lee JY, Watanabe F, 2003. *Predicting the Longitudinal Axial Strain in the Plastic Hinge Regions of Reinforced Concrete Beams Subjected to Reversed Cyclic Loading*. Engineering Structures 25(7): 927–939.

Liew HY, 2004. *Performance of Hollow-core Floor Seating Details*. University of Canterbury, Department of Civil Engineering, ME thesis, p139.

Lindsay R, 2004. *Experiments on the Seismic Performance of Hollow-core Floor Systems in Precast Concrete Buildings*. ME thesis, Civil Engineering, University of Canterbury.

Lindsay RA, Mander JB, Bull DK, 2004. *Experiments on the Seismic Performance of Hollow-core Floor Systems in Precast Concrete Buildings*. In Proceedings, 13th World Conference on Earthquake Engineering, Vancouver BC, Canada, 1–6 August, paper 585.

MacPherson C, 2005. *Seismic Performance and Forensic Analysis of Precast Concrete Hollow-core Floor Super-assemblage*. ME thesis, Civil Engineering, University of Canterbury.

MacPherson CJ, Mander JB, Bull DK, 2005. *Reinforced Concrete Seating Details of Hollow-core Floor Systems*. In Proceedings, New Zealand Society for Earthquake Engineering Conference, Wairakei, New Zealand.

Matthews J, 2004. *Hollow-core Floor Slab Performance Following a Severe Earthquake*. PhD thesis, Civil Engineering, University of Canterbury.

Megget LM, Fenwick RC, 1988. *Seismic behaviour of a Reinforced Concrete Portal Frame Sustaining Gravity Loads*. Proceedings Pacific Concrete Conference, Vol. 1, November. Auckland, pp 41–52.

Peng B, Dhakal R, Fenwick R, Carr A, Bull D, 2007. *Analytical Model on Beam Elongation within the Reinforced Concrete Plastic Hinges*. NZSEE Conference, Palmerston North, April, Paper No. 43.

Restrepo JI, Rodregios M, Saunders D, 2000–4. *Earthquake Resistant Precast Concrete Buildings: Wall-slab coupling effects in low-rise buildings*. University of Canterbury, Civil Engineering research report.

Restrepo-Posada JI, 1993. *Seismic Behaviour of Connections Between Precast Concrete Elements*. University of Canterbury, Department of Civil Engineering Research Report, No. 93-3, p 385.

SANZ 1997. *Steel Structures Standard, NZS 3404*. Standards New Zealand.

SANZ 2006. *Concrete Structures Standard, NZS 3101-2006, including amendments 1 and 2 (2008)*. Standards New Zealand.

SANZ, 2004. *Earthquake Actions Standard, NZS 1170.5*. Standards New Zealand.

SANZ. *Concrete Structures Standard; NZS 3101-2006*. Standards New Zealand.

Woods L, 2008. *Significance of Negative Bending Moments in the Seismic Performance of Hollow-core Flooring*. ME thesis submitted, Civil and Natural Resources Engineering, University of Canterbury.

6 Design and specification of new hollow-core floor systems

6.1 Introduction

This section provides guidance for the design of new hollow-core floor systems.

New hollow-core systems will need to satisfy the performance requirements outlined in section 4 above. As outlined in 4.3 these performance requirements can be assumed to be met if the new hollow-core floor meets the requirements of NZS 3101(including amendments 1 and 2) and the relevant requirements of NZS1170.5.

However, the provisions of these Standards will need to be interpreted correctly to provide the required level of performance.

The ability of a hollow-core floor to perform satisfactorily during an actual earthquake will finally depend on how well the designer has brought together all of the requirements of the Standards and how well the underlying principles have been understood and executed.

The objective of this guideline is to provide a road map to designers to lead them through the design process.

6.2 General considerations

6.2.1 Design responsibilities

A new hollow-core floor must satisfactorily meet demands for resisting earthquake actions and other effects such as those arising from gravity, temperature and shrinkage.

As it is an integral part of the structure the design of the hollow-core floor system can not be considered in isolation from the main structure to which it is attached.

In the past it has been common practice to assume that the hollow-core floor system is a proprietary product, the design of which is the responsibility of the precaster. Typically the precaster's designers have only verified the vertical (ie, gravity) component of the design. This is perhaps not surprising as the precasters would typically have not been made aware of the demands on the floor system resulting from earthquake loads on the building as a whole and would have not have had the means to determine these from first principles.

If the building designer did not address the issues related to the design of the floor system for earthquake actions then the conclusion must be that the effects of earthquake loading on the floor system had been largely ignored in the design of the building. Clearly this is not satisfactory as the satisfactory performance of the floor system under earthquake loading, especially earthquake, is typically critical to ensuring the adequate performance of building as a whole.

While it is acceptable to split the design responsibility for verifying satisfactory performance under gravity and earthquake loads, it is essential that both are addressed and that there are no "gaps" in the overall design. In the absence of any other arrangements it is considered that the design engineer for the building as a whole should be responsible for ensuring that the design for the floor system and the building as a whole have been fully addressed.

All design parties must be made aware of all of the demands appropriate for the aspect of the building they hold design responsibility for. This will typically mean that the building design engineer should provide the floor designer with the expected interstorey drifts, diaphragm shears, vertical seismic accelerations, any restraints required, any expected supporting beam inelastic elongations and expected support deformations, irrespective of whether or not the floor designer is responsible for the effects resulting from the earthquake demands on the building as a whole.

6.2.2 Design process

The design process for a hollow-core floor system should typically involves the following steps:

1. Building designer determines the appropriate structural concept for the building, including indicative dimensions for the hollow-core floor system.
2. Building designer analyses the building structure to confirm the adequacy of the sizing of the main structural members and assess the demands on the hollow-core floor.
3. Building designer designs the main structural members to verify their adequacy.
4. Building designer prepares a specification for the floor system, including the following information:
    a. General structural arrangement including the assumed self weight of the floor and any significant floor penetrations.
    b. All other permanent actions including partition loads and potentially removable loads.
    c. All design imposed actions on the floor including uniformly distributed live loads and point loads.
    d. Intended floor support arrangements including any special requirements for plastic hinge regions.
    e. Earthquake induced support displacements and rotations.
    f. Vertical seismic loads (accelerations).
    g. Floor diaphragm requirements.
    h. Extent of any expected beam elongations resulting from inelastic behaviour in the support beams.
    i. Tolerance requirements.
    j. Any other requirements, eg, minimum concrete strengths, propping restrictions fire rating, durability, specifically required details, etc.

5. Floor designer completes the design of the floor system to meet the requirements of the floor specification and submits the details (shop drawings and calculations) to the building designer. The floor designer's submission should confirm the required hollow-core sizes and self weights, and also cover any requirements for temporary propping, expected cambers and deflections, minimum concrete strengths at various stages of construction, details of prestress reinforcing, seating and connection details etc.

   Note: As outlined in 6.2.1 above the design responsibility for the floor system could be split between the building designer and the floor designer.

6. Building designer reviews the floor designer's design submission and judges if it meets the project specification, that the final floor details are consistent with the original assumptions made regarding self weight and that the proposed floor design is consistent with the design assumptions for the building as a whole.

   Note: Review and approval by the building designer is not expected to relieve the floor designer of responsibility in respect of the design to the specification that he/she has carried out.

7. Building and floor designers amend, if necessary, and finalise designs.

6.2.3 Design, building consent and construction documentation

It is recommended that the documentation to justify/confirm the design and construction of a hollow-core floor system include but not be limited to:

- design basis and assumptions
- design details
  - floor system
  - floor units
  - supporting and adjacent structure
- design producer statements
- construction monitoring requirements
- consent and approvals
  - building consent
    - fully detailed design
    - performance-based specifications
      - obligations of designer
      - obligations of manufacturer
    - construction monitoring requirements
  - code compliance certificate
    - producer statements
    - as-built information.

For more comprehensive guidelines on documentation, and to understand how documentation for the floor system should interface with other disciplines refer to the NZCIC Design Documentation Guidelines – Structural, as amended August 2008 (http://www.nzcic.co.nz/Design/DDG-Structural.pdf). In particular refer to the Detailed Design Phase and Construction Design Phase documentation guidelines for recommendations for building consent submissions and amendments.

6.2.4 Design issues

The design issues relating to hollow-core can be summarised as:

- evaluation of demands on the floor system
- verification of the performance in terms of:
  - end support
  - slab actions
  - diaphragm actions
  - structure restraint
  - cut-outs and penetrations.

6.3 Assessment of seismic demands

The seismic demands on the floor system will typically be assessed by structural analysis.

Analyses shall be completed in accordance with the requirements set out in AS/NZS 1170. This includes choice of member and material properties.

Demands are required at both the serviceability (SLS) and ultimate limit state (ULS) levels. Different member and material properties may be required for each.

The demands on the hollow-core floor system will include, but not be necessarily limited to:

- imposed in-plane actions (shears, compressions and tensions) resulting from the floor acting as a diaphragm (refer 5.3.3)
- rotation of the hollow-core end support as a result of sway distortions in the structure (refer 5.3.2)
- vertical accelerations
- restraint actions resulting from differential displacement/distortion of adjacent structure (refer 5.2.4 and 5.3.4)
- plastic hinge elongation (refer 5.2, 5.3.1 and 5.3.5)
- other demands, eg, lateral restraint actions from tied-in columns (refer 5.3.4), cut-outs and penetrations (refer 5.3.5)
- thermal and/or shrinkage effects.

For the ULS, any demands resulting from distortions imposed on the floor system from the structure should be assessed assuming elastic lateral earthquake loads on the structure, ie, the design loads multiplied by μ. Where appropriate the effect on rotations and distortions of potential sidesway mechanisms shall be allowed for as specified in NZS 1170.5 clause 7.2.1.1 (ie, in accordance with NZS 1170.5 clause 8.5.3). *NZS 3101 also has a requirement to consider 1.5 times these distortions, ie, MCE, but the PCFOG believes this is too conservative and beyond what is required in AS/NZS 1170 to show compliance with the ULS.*

Vertical accelerations shall be determined from NZS 1170.5 clause 5.4.2. General guidance on the derivation of vertical loads for hollow-core floors and the application of NZS 1170.5 is given in Appendix 6A and in section 5.

The presence of pretensioned units such as hollow-core in a floor has the potential to significantly enhance the strength of the beam plastic hinges. This enhancement should be evaluated (refer 5.2.2) and taken into account when considering the capacity design of the structure as a whole.

6.4 Verification of performance

6.4.1 General

Verification of performance of the hollow-core floor system can be achieved by one of the following:

- compliance with NZS 3101:2006
- justification from first principles
- appropriate testing.

It is expected that the most commonly employed verification method will be compliance with the requirements of NZS 3101. The following notes are based on achieving compliance with NZS 3101. Appropriate reference clause numbers from NZS 3101 are shown in bold within parentheses, thus (**3.2.1**), immediately following the guidance note. Clause references not in bold are references to this guideline document.

Justification from first principles is legitimate and will need to address all of the issues outlined in sections 4 and 5. Such an approach will, however, be an alternative solution under the Building Code. Consent submitters adopting this approach should expect more scrutiny than if the building code verification method is used.

It is unlikely that testing would be viable to completely verify a hollow-core floor system. However, aspects of the design could well be verified by testing. If testing is to be used it should be in accordance with the requirements of AS/NZS 1170.0 Appendix B.

Hollow-core units verified using NZS 3101 must be designed to achieve the ultimate and serviceability limit states in accordance with AS/NZS 1170: Part 0 (**2.2**).

6.4.2 End support

End support requirements for hollow-core are covered in Clause 18.7 NZS 3102. These requirements are as follows (dimensional requirements are summarised in Figure 6.1):

6.4.2.1 Seat bearing

Hollow-core units shall be mounted on continuous low friction bearing strips with a coefficient of friction less than 0.7 and with a minimum width of 50 mm (**18.7.4(c)**).

6.4.2.2 Seating widths outside plastic hinge regions in supporting beam

Un-armoured edges: After allowances for all tolerances (manufacturing, erection and accuracy of other construction), the distance from the edge of the support (face of beam) to the end of the precast unit, in the direction of the span shall be greater than the clear span/180 but not less than 75 mm (**18.7.4(b)(i)**).

Bearing strips shall be set back at least 15 mm from both the edge of the supporting beam and the end of the hollow-core unit, or, at least the chamfer dimension at chamfered edges (**18.7.4(b)(ii)**).

Armoured edges: The requirements for armoured edges may be reduced by 15 mm provided that adequate support is retained after allowing for plastic hinge elongation (**18.7.4(d)**).

Note: The PCFOG is not sure that including the proviso above makes sense. Either the armouring provides a benefit or it doesn't. Not required for un-armoured edge.

6.4.2.3 Seating widths within plastic hinge regions in supporting beam

When determining the seating width when the seating is within the plastic hinge length of the supporting beam, the cover concrete of the support shall be assumed to have spalled (**18.7.4(f)**) and the edge of the bearing strip shall not project beyond the straight portion of the horizontal stirrup leg nor beyond the interior face of the corner longitudinal beam bar (**18.7.4(a)**).

Note: The PCFOG believes second requirement above is excessive. Not projecting past the outer face of the vertical beam stirrup legs should be sufficient and such a requirement should not be necessary if additional support is provided. The PCFOG suggests that either seating widths be detailed as for outside the plastic hinge region but ignoring the cover width (to outside of beam stirrups), or that additional support be provided. (eg, as discussed in section 8).

Figure 6.1: Dimensional requirements for end support of hollow-core units

(a) Seating of hollow-core units (un-armoured edge) (b) Seating of hollow-core units (armoured edge)

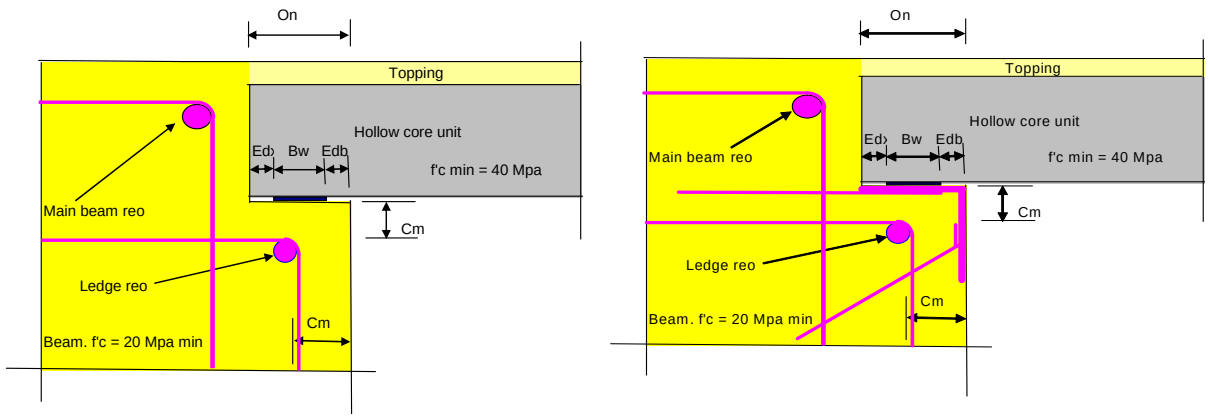

6.4.2.4 Allowance for support rotation

The end support of the hollow-core unit shall be designed (based on rational calculation or testing) to meet the assessed rotational demands between the end of the hollow-core unit and the supporting structure (**18.6.7.1, 18.7.4.(g)(i)**).

Adequate allowance may be deemed to have been provided if the design and detailing specified in either clause **C18.6.7.1(a) to (d)** or **C18.6.7.1(e)** is adopted.

6.4.3 Slab actions

6.4.3.1 Bending and shear

The adequacy of the hollow-core section (including topping) to carry the bending and shear actions shall be confirmed. The mechanisms to be considered are discussed in section 5. A procedure for analysing the hollow-core floor section is provided in Appendix 6B.

6.4.3.2 Torsion

Hollow-core units are unreinforced for torsion. They may be checked for torsion in accordance with clause **7.6**. Or, preferably the potential for torsions to be developed should be minimised through the introduction of flexible links. Refer 5.2.4 and 5.3.2. Torsional strengths for 300 and 300 hollow-core units with 75 mm topping are given in Table 5.2 and indicative safe twists in 5.3.2.7.3.

6.4.3.3 Differential displacement

The demand resulting from differential distortion between hollow-core units and a parallel spanning structural frame may be deemed to have been met if a linking slab in accordance with clause **18.6.7.2(a)** has been provided.

If diaphragm shear or other effects demand a thicker slab than allowed for in this clause it will be necessary to confirm that the arrangement is satisfactory. If this is carried out by calculation it will typically require a 3D structural analysis with both the structural bent and the adjacent hollow-core slab modelled to confirm that the hollow-core slab is not overstressed when the combined system is subjected to the full design lateral displacement.

6.4.4 Diaphragm actions

To be effective as a diaphragm a floor system must be capable of developing the necessary compressive stress paths, shears and tension fields and fulfil all requirements of section **13** NZS 3101. It must also retain sufficient attachment to the main structural system to enable transfer of loads when subjected to the full displacements calculated for the ULS. The potential negative effects of plastic hinge elongation at building corners should be considered (refer 5.3.3). Curtailment of starter bars shall be staggered (**13.3.7.3**).

6.4.5 Structure restraint

Where column lateral restraint is provided by ties back into the hollow-core floor system the tieback shall conform to clause **10.3.6**. Refer also 5.3.4.

6.4.6 Cut-outs and penetrations

Refer 5.3.5.1.

6.4.7 Delamination of the insitu concrete topping

Refer 5.3.5.2.

6.4.8 Tensile strength of concrete

Refer 5.3.5.3.

Appendix 6A: Vertical seismic loading

General

Vertical seismic motion generates inertial forces in members which span horizontally. These actions need to be considered in design or retrofit of elements which do not have a high level of ductility and where the span to depth ratio (including topping) is reasonably large (ie, greater than total depth of floor times 35).

The Loadings Standard for Earthquake Actions, NZS 1170.5, in clause 3.2 specifies that the response spectrum for vertical ground motion should be taken as 70% of that for horizontal ground motion.

Hollow-core units, which do not have top strands and are reinforced with mesh, have very limited ductility. The strain causing failure in welded mesh is typically in the range of 1% to 2%. At failure in flexure for negative moments, the tensile strains in the reinforcement are insufficient to allow appreciable inelastic deformation to develop in the concrete. Consequently standard ultimate strength theory can not be applied to determine the negative ultimate flexural strength of these partially prestressed members. The negative moment flexural strength may be determined either:

(a) using standard ultimate strength theory ignoring prestress and suing a internal lever-arm equal to the distance of the reinforcement to the mid depth of concrete between the base of the ducts and the soffit of the hollow-core unit (see 1.3); or

(b) based on a section analysis where the tensile strain in the mesh is limited to 1 percent and the concrete in compression is assumed to have an elastic response, or a more comprehensive stress strain relationship is assumed for the concrete.

The first method of assessing the negative moment capacity tends to be conservative.

Vertical seismic actions

In determining the structural ductility that can be safely used to assess vertical seismic actions in hollow-core flooring units a number of aspects need to be considered:

1. Mesh, if it is used in the topping the floor units have very limited ductility for negative moments.
2. Under downward loading any flexural cracks on the top surface will close and the member will behave as an uncracked element. However, under upward loading flexural cracks should form to allow the reinforcement to resist negative moments. These cracks significantly reduce the stiffness of the member. As a consequence greater displacements can be expected in the upward direction than in the downward direction. The change in stiffness with direction of loading means the commonly used equal displacement and equal energy concepts no longer apply and standard design rules based on these can be expected to lead to an underestimates the upward displacement.

3. Whether reinforced with either mesh or 12 mm bars at 300 centres, the proportion of reinforcement in the insitu concrete topping is generally low. As a consequence the tension force capacity of the reinforcement crossing a crack is insufficient to overcome the tensile strength of the concrete. Hence yielding of reinforcement is confined to one crack, which severely limits the ductility of the member.

In view of these points it is recommended that design and retrofit actions due to vertical seismic actions are based on a structural ductility factor, μ, of 1. μ may be increased to 2 where ductile reinforcement bars are used. The fundamental period of vibration for vertical excitation of flooring units is generally in the range of 0.1 to 0.35 seconds. Only the actions corresponding to the first mode of vibration of the floor need to be considered.

The standard assumption used in elastic analysis for ground motion is that equivalent static forces representing dynamic actions are proportional to the mass and displacement of the mass relative to the ground. Consequently for precast units spanning in a horizontal direction the equivalent static forces are **not** uniformly distributed. They are distributed in proportion to the deflected shape. For simply supported units the deflected shape may be approximated to a parabola. Using this assumption the distribution of moments and shears along a member can be found from Table 6A.2 in terms of the vertical seismic force, F_{pv}, and the span of the unit, L. The vertical seismic force is given in NZS 1170.5, by:

$$F_{pv} = C_{pv} C_{vd} R_p W_p = C_{pv} C_v(T_v) R_p W_p = C_{pv} 0.7 C(T_v) R_p W_p \leq 2.5 W_p$$

where W_p is the gravity weight supported by the unit which for the purposes of checking vertical earthquake effects will be dead and long term live load where appropriate), T_v, is the fundamental period of vibration of the unit and $R_p = 1$.

Table 6A.1: ULS vertical seismic force, F_s/W, for main centres for T_v between 0.1 and 0.4s and taking $R_p = 1$, according to NZS1170.5

Location	μ_p	Fundamental period (s)	Site subsoil class A and B	C	D and E
Auckland	1	0.1–0.4	0.22	0..26	0.27
	2	0.1–0.4	0.12	0.15	0.15
Wellington	1	0.1–0.4	0.65	0.82	0.84
	2	0.1–0.4	0.36	0.45	0.46
Christchurch	1	0.1–0.4	0.36	0.45	0.46
	2	0.1–0.4	0.10	0.13	0.25

Table 6A.2: Distribution of vertical seismic actions along a precast floor unit

x/L	0.0	0.1	0.2	0.3	0.4	0.5
V/F_{pv}	0.5	0.47	0.4	0.28	0.15	0.0
$M/F_{pv}L$	0.0	0.05	0.09	0.13	0.15	0.16

x = distance from support.

7 Assessment of existing hollow-core floor systems

7.1 General

The assessment of buildings incorporating hollow-core floor units requires detailed knowledge of the as-constructed building. While working drawings for the floor systems are useful, a comprehensive investigation is still required to establish details of construction. Small variations in construction details can jeopardize structural integrity and erode the margins of safety required for satisfactory earthquake performance.

The structural deformations of the building at ultimate displacement of the structure determine the design criteria for assessment of the hollow-core floor system. These deformations need to be determined in order to assess the ability of the hollow-core floor to withstand the deformations.

It is important that all key information is carefully obtained.

7.2 Key information required

7.2.1 Site location and characteristics

Information on the site and its seismological, geological and geotechnical features is a critical part of the assessment. Current thinking on these aspects may be significantly different from those assumed in design. For example, the seismic hazard factor may have increased or the soil classification defining likely building response may result in higher demands on the building when viewed with today's knowledge.

7.2.2 Building history – designer / builder / pre-cast supplier / territorial authority

The properties of the hollow-core units vary between manufacturers and the sections profile are pre-stressing layout have varied since the first hollow-core were introduced.

Where possible the manufacturer of the units should be established. Some hollow-core manufacturers maintain comprehensive job records and these are invaluable where they are available. Other sources of information include the territorial authority records, the consulting engineers or other party responsible for the structural design of the building, the architects and the main contractor for the building.

Where the above enquires fail to locate the manufacturer and/or the construction details for the hollow-core units, it will be necessary to establish the profile, pre-stressing and installation details of the units by on site investigations. Where documentation for the hollow-core floor exists, a sufficient investigation is still necessary to confirm that important aspects of the construction comply with the design documentations. The width of the units and the edge detail can usually be observed from the underside of a floor, often by removal of ceiling tiles. Determination of the internal profile of the units involves using a proformeter to locate the pre-stressing strand and drilling into the cores of the units. Other techniques include wetting the underside of the units and observing the profile of the webs exposed through the different rates of evaporation on the surface of the underside of the hollow-cores.

This technique should enable the location and number of webs to be established on the underside of units. Refer to section 3 for unit types, appendix.

Web thicknesses of the units shown are minimums. Actual web thickness may be greater as the thickness is dependent on the characteristics of the concrete being extruded.

7.2.3 Design loading versus actual loading

It should not be assumed that the loading requirement at the time of design is the same as that of current standards. For example, the use of the building may have changed.

Nor should it be assumed that the floor units have exactly the load capacity of the required design load. It is the depth, profile and extent of pre-stress that determine the load capacity of the hollow-core floor system.

Every effort should be made to determine the load capacity of the floor using basic information about its structural elements. All manufacturers have load span tables applicable to their units or load capacity can be assessed once the profile and extent or pre-stress has been established.

7.2.4 Structure type and details

The deformations imposed on the hollow-core floor units are determined by the type, size and detailing of the seismic lateral load resulting elements of the building and the details of the supporting and surrounding structure

The proportions of the structural system, material of the construction, material properties and details, including foundations, are necessary to allow modelling of the structure to determine the deformations imposed on the hollow-core floor system at the ultimate limit state. These fundamental characteristics could be crucial in proving that an existing hollow-core floor has adequate safety.

Ductile reinforced concrete frames are expected to exhibit beam elongation under inelastic deformation. The beam elongation can result in high imposed deformations and induced stress on the hollow-core floor system. Shear wall structures impose less deformation than frames and K brace systems need the active link to be free to deform plastically during an earthquake. The hollow-core floor system must be capable of accepting the deformations of the structural systems at the limit of the inelastic deformation of the structural system if the floor system is to withstand the earthquake.

While the ductility of the seismic resisting element assists that element withstanding the earthquake, the inelastic deformation of the seismic resisting element may initiate premature failure of the brittle hollow-core floor system.

7.2.5 Material properties – concrete, steel

The following information is desirable prior to undertaking an assessment of the hollow-core floor system.

Table 7.1: Material properties – precast flooring system

Material properties – precast flooring systems	
Manufacturer	
Unit type	
Date of manufacture	
Concrete strength – specified	MPa
Concrete strength – actual	MPa
Pre-stress in units	
Number of strands	
Strand size	mm
Design loadings	kPa

Table 7.2: Material properties – topping

Material properties – topping	
Topping	MPa
Unit camber on installation	mm
Topping thickness at support	mm
Topping thickness at midspant	mm
Concrete strength – specified	MPa
Concrete strength – actual	MPa
Reinforcement – proof stress/yield	
Reinforcement – topping	MPa
Reinforcement – edge detail	MPa
Reinforcement – end detail	MPa

7.2.6 Floor unit and connection details

The performance of the hollow-core floor system is affected by the construction details applying at the supports and edges of the hollow-core units.

7.2.7 Infilling of cores

Many units were provided with plastic end caps (refer Figure 7.1(a)). Some floors were known to have been constructed with paper forced into the ends of the cores (refer Figure 7.1(b)), while others had no attempt to seal the cavity (refer Figure 7.1(c)). The extent to which concrete entered the core and developed end fixity is dependent on the method of sealing the core, if any, and the extent of the vibration undertaken during placement of the insitu concrete.

The presence of the insitu concrete in the cores can be determined by drilling into the cores at the ends of the units. The extent of the penetrations can be established by drilling at progressively increased distances from the ends of the hollow-core units.

Figure 7.1: Typical details for sealing cores in hollow-core

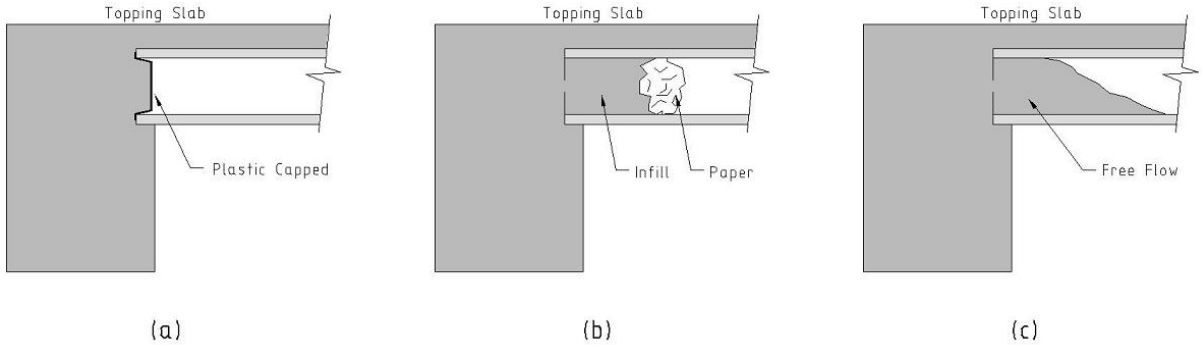

7.2.8 Support details for hollow-core

The type of seating detail for the units can normally be established by inspection of the interface between the hollow-core units and the supporting beam at the ends of the units. Units were normally supported on precast units (Figures 7.2(a) and (b)), formwork (Figure 7.2(c)), in which case the support became insitu concrete or on a mortar bed (Figure 7.2(d)) laid on an already formed precast or insitu concrete ledge. Buildings of more recent construction incorporate a bearing strip. Blockwork offers little restraint to movement of units supported on it.

Figure 7.2: Typical support details for hollow-core

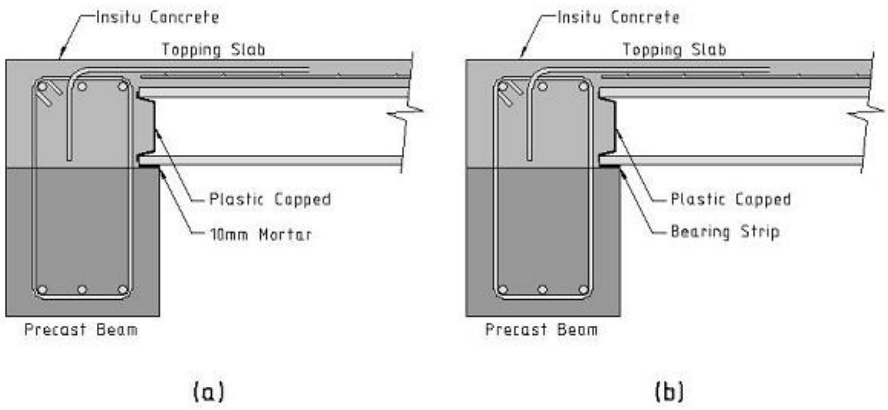

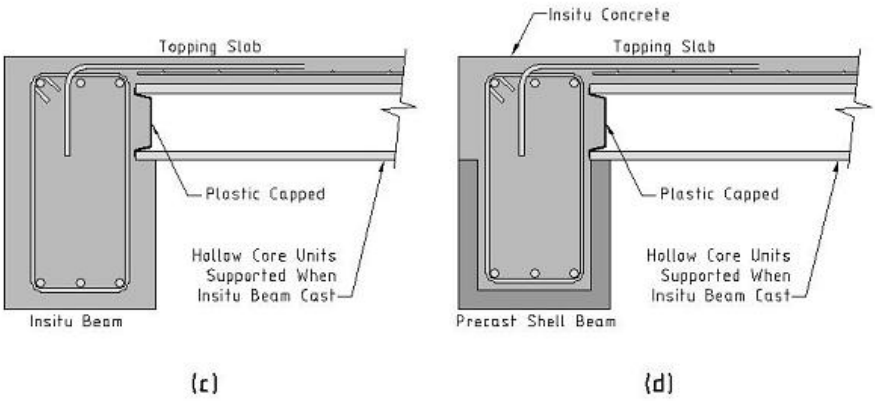

The width of seating is more difficult to establish. For units supported on precast beams it is often possible to slide a sheet of thin material in the interface between the precise elements. For hollow-core units supported on insitu concrete or on mortar bed where a crack is present in the topping at the end of the hollow-core units, it may be necessary to drill vertically through the entire depth of the floor system and measure to the crack on the surface of the floor and to the face of the support beam on the underside of the floor. The alternative is to scabble the concrete at the underside if the support to expose the end of the hollow-core unit.

Figure 7.3: Investigation of support details

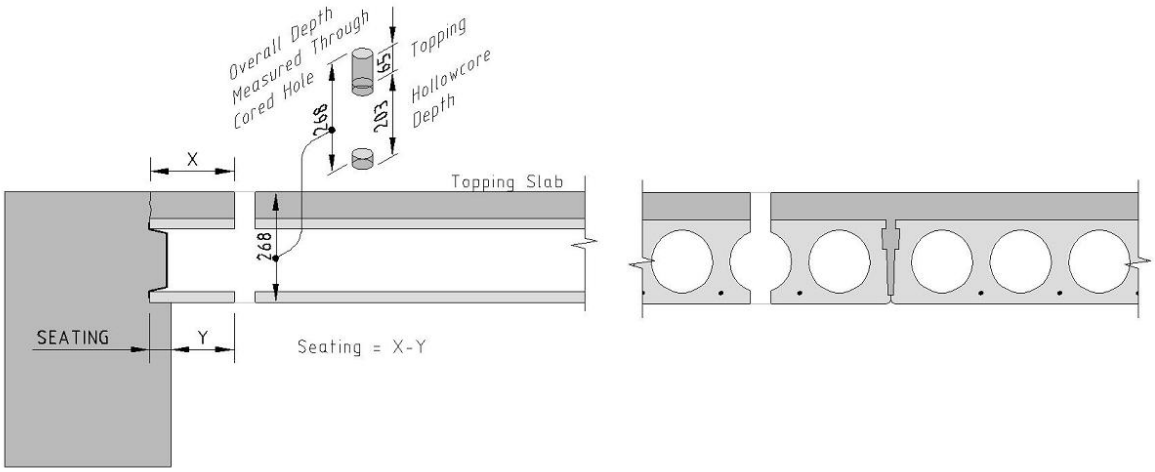

Often the hairpin detail was adopted when the units were supplied under length. The width of the seating should therefore be established at both ends floor level. The preferred locations are zones subject to plastic hinge elongation effects.

Table 7.3: Width of sections – end support

Criteria	Design	Construction
Method of capping hollow-cores	Plastic/paper/other	Plastic/paper/other
Seating of units	Mortar/insitu/precast	Mortar/insitu/precast
Width of seating	mm	mm

Occasionally a hairpin detail was adopted by the designer (refer Figure 7.4) this detail often involved the cutting of slots in the top of the hollow-core units to allow concrete to be placed and vibrated into the core (refer Figure 7.5). This detail, where adopted, develops significant restraint at the ends of the hollow-core units.

Figure 7.4: Hairpin detail

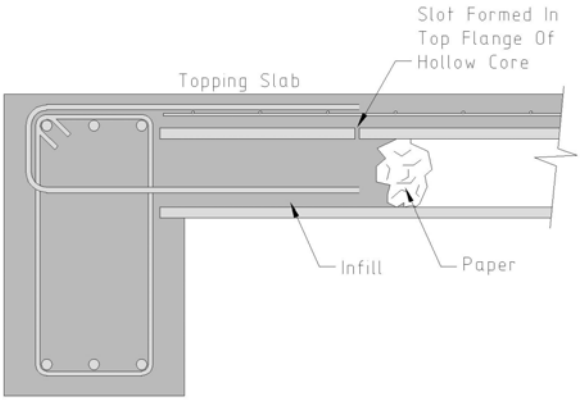

Figure 7.5: Filled cores

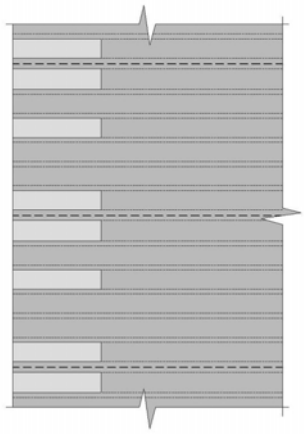

7.2.9 Reinforcement in topping at end support

Reinforcing details at the ends of the hollow-core units are typically included on the structural plans. The structural plans also nominate the reinforcement in the topping. Until recently, The reinforcement in the topping was hard drawn mesh. An important aspect of the support detail is the length of the starters from the support beam into the topping slab over the hollow-core units.

Figure 7.6: Reinforcing details at end support

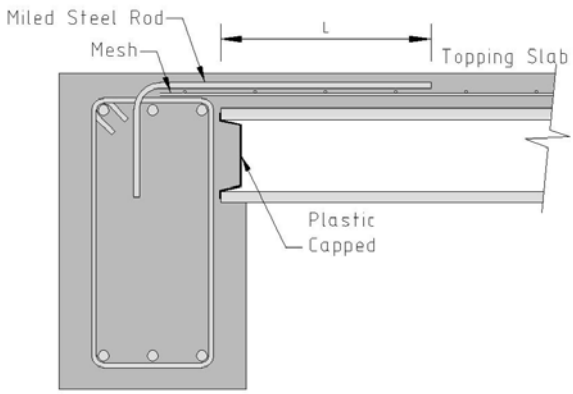

The spacing and length of the starters can be established using proformeter, the regular layout of the mesh reinforcement can make locating the ends of the starters difficult and it may be necessary to expose the end of some rods in order to have confidence of the as constructed detail.

Table 7.4: Reinforcement in topping – end support

Reinforcement in topping – end supports	
Size	mm
Spacing	mm
Length beyond end unit (refer Figure 7.3.6.11)	mm

7.2.10 Reinforcement in topping to edge detail

The reinforcing provided between the perimeter frame in the direction of span of the precast units and the topping over the hollow-core units to adjoining frame should be established.

Figure 7.7: Reinforcing details at edge support

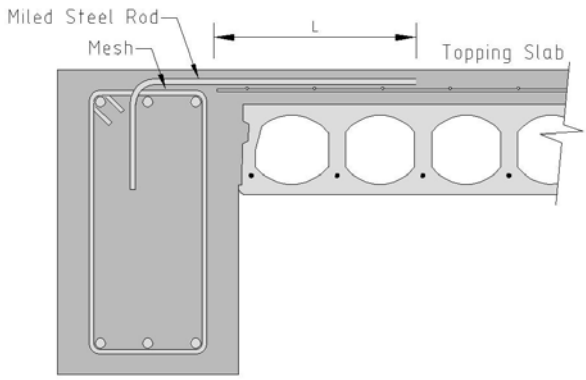

Table 7.5: Reinforcement to edge detail

Reinforcement to edge detail	
Size	mm
Spacing	mm
Length beyond end unit (refer Figure 7.3.6.13)	mm

7.2.11 Penetrations

Penetrations in the floor often weaken the hollow-core unit. At large penetration to stairs, lifts, etc the hollow-core units are typically framed by edge beams or supported on structural walls. The effect of any notching or cutting into units at such penetrations should be considered.

Figure 7.8: Penetrations

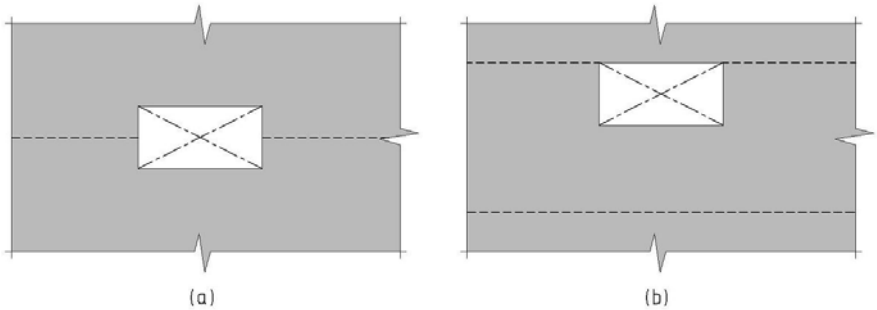

Minor penetrations through the core of the hollow-core units for services, if neatly made, should not significantly affect the strength of the units. Multiple penetrations aligned in adjoining cores, roughly made penetrations or penetration through the webs of units are more significant and each needs to be identified and evaluated.

Such penetration in zones of the hollow-core units subjected to significant induced deformation may initiate premature failure of the units.

Figure 7.9: Typical penetrations in hollow-core

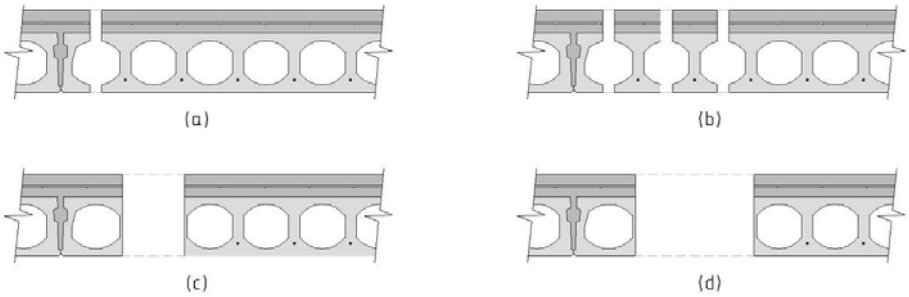

A particularly significant penetration of the hollow-core units is that made in the edge of a unit spanning parallel to and adjoining a seismic resisting frame where the edges of the unit are notched to allow a column to penetrate the unit.

Figure 7.10: Notching of units around a column

7.3 Techniques and approaches for determining as-built condition

The following tables provide a checklist of possible techniques and approaches to determine the as-built condition of an existing building. It is intended that those responsible for the assessment will review these and select the techniques most appropriate to their situation. A review of the list may prompt ideas for different techniques and approaches which better fit the circumstances than any on the list.

Table 7.6: Techniques for determining as built condition

Hollow-core units	
Hollow-core unit type	Measure width of units on underside units Refer manufacturer's information
Hollow-core unit depth	Observe construction at penetration in floor, stairs, etc Drill through hollow-core to allow measurement of overall floor thickness and deduct known depth of topping. Core through entire floor to obtain overall floor thickness from which unit thickness and measure topping thickness from core can be derived.
Diameter of pre-stressing steel • Location of pre-stressing steel	Locate number of strands using a Proformeter on underside of units Refer manufacturer for size strand
Topping	**Figure 7.11: Establishing unit thickness** 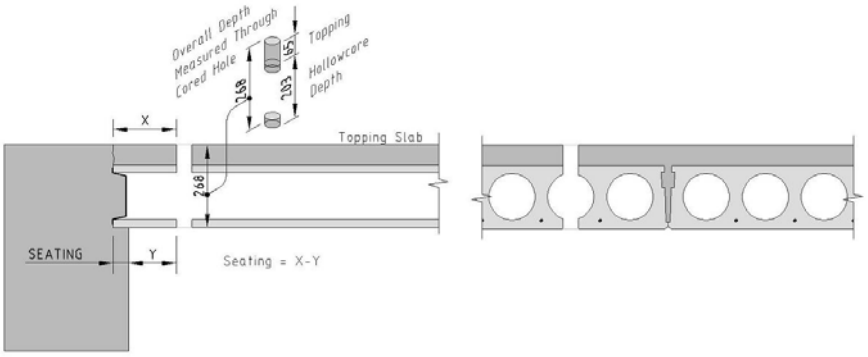
Topping thickness	Observe construction at penetrations in floor Core through topping into hollow-core to obtain that allows depth of topping from surface to topping precast unit interface to be measured – Refer Figure 7.4.1.
Concrete strength	Refer to specified concrete strength Refer to concrete manufacturers testing records Use of Schmidt hammer (Other)
Reinforcement	
• Location	Use of Proformeter Local opening up X-ray
• Grade	Refer to construction plans Exposure of sufficient length to determine grade from reinforcing markings Recovery of sample and testing

Hollow-core units	
Cover	Use of Proformeter
Detailing	
Precast unit seating	Observe crack in floor Measure from penetration of drill through core to allow seating depth to be established or scabble beam at underside of unit to expose width of seating
Length of starters	Use of proformeter combined with confirmation by local opening up
Crack at junction	Confirm by opening up floor at probable location of joint

7.4 Assessment – outline approach

Section 4 sets out performance criteria for new hollow-core floors, describing all key aspects. Section 5 describes the potential failure mechanisms, while section 6 outlines design procedures to avoid the potential failure mechanisms and meet the requirements of section 4.

It is important that existing hollow-core floors have similar levels of safety to new buildings, so that the first objective of the assessment should be to compare the performance with that expected of a new building. Any shortfalls can then be identified and attempts made to quantify them as a first step in deciding on any remedial action.

Table 7.7 is a summary of issues that need to be considered in making the assessment of performance, dealing with the role of the floor in providing end support, and acting as a slab, as a diaphragm and as a restraining element for the surrounding structure. The possible adverse impacts of cut-outs are noted.

The significance of each of these items needs to be assessed and possible remedial measures noted.

Table 7.7 gives general guidance on the issues and what to look for. Section 7.5 attempts to define minimum acceptable performance levels for the most important aspects of hollow-core floor safety.

Table 7.7: Assessment issues summary

Section A – Demand issues		
a	Earthquake-induced displacements – deflections, rotations, twists	Can markedly affect hollow-core floor functional capacity – support, slab action, diaphragm role and structure restraint
b	Critical dimensions of hollow-core units	Small changes in dimensions can change structural properties markedly – for example, the minimum width of web
c	Beam elongation	Differential displacement can fracture steel that provides diaphragm action and structure restraint; can reduce effective width of supporting ledge
d	Vertical seismic load	May be a significant proportion of the gravity load and thus increase shear in webs of units; increases relative rotations at support

Section A – Demand issues		
e	Tensile strength of concrete	A critical factor in determining the shear capacity of units and the support capacity of supporting ledges
f	Gravity load	Generally dead load of units and topping will be on simply supported basis; subsequent load will be on the basis of some fixity at the supports, depending on the amount and detailing of top steel

Section B – Capacity issues					
Ref no.	**Critical floor function**	**Nature or cause of failure**		**Contributory cause / effect**	**Assessment criteria**
1	**End support**	a	Insufficient seating	Reduction due to construction tolerances/errors Insufficient edge distance Less than minimum bearing Insufficient allowance for beam elongation Insufficient allowance for relative rotation	After all allowances, there must be at least 20 mm residual overlap between the end of the unit, including any reinforcement in infilled cells, and the face of the beam
2	**Slab action**				
2.1	Bending moment effects	a	Positive moment failure	Relative rotation	Positive moment is induced by relative rotation and causes tension at the bottom of the unit (refer section 5 for details of potential failure mechanisms)
		b	Negative moment failure	Relative rotation or end moment	Negative moment induces tension in the topping near the end of the unit (refer section 5 for details of potential failure mechanisms)
		c	Vertical seismic loading – up	1) Makes (a) above worse; 2) Inadequate negative moment capacity at centre span	Allow for this when assessing adequacy of joint to cope with rotation and of capacity of centre section (refer section 5 for details of potential failure mechanisms)
		d	Vertical seismic loading – down	1) Makes (b) above worse; 2) Inadequate positive moment capacity at centre span; 3) Inadequate negative moment capacity	Allow for this when assessing adequacy of joint to cope with rotation and of capacity of centre section (refer section 5 for details of potential failure mechanisms)

Section B – Capacity issues					
Ref no.	**Critical floor function**	**Nature or cause of failure**		**Contributory cause / effect**	**Assessment criteria**
2.2	Shear / torsion effects	a	Torsional failure	Twisting induced by structure displacements	Assess twisting; assess capacity of units to tolerate without failure
		b	Web splitting	Shear due to load or displacement	Assess load and/or displacement; check capacity of web (refer section 5)
		c	Diagonal tension in negative moment zones	Shear / bending moment combination due to load or displacement	Assess effects of applied or induced loads; design units to tolerate these within allowed material properties
		d	Vertical seismic loading – up	Makes effects of 3 a), b), c) worse	Allow for this when designing joint to cope with rotation and checking the capacity of the centre section (refer section 5)
		e	Vertical seismic loading – down	Makes effects of 3 a), b), c) worse	Allow for this when designing joint to cope with rotation and checking the capacity of the centre section (refer section 5)
3	**Diaphragm action**	a	Failure of linking slab	Differential elongation Differential vertical displacements Shear forces to be transferred	Assess elongation, displacements and shear actions; check capacity of linking slab to cope without undue loss of diaphragm capacity
		b	Failure of topping steel	Insufficient ductility to cope with movements and/or diaphragm loads	Assess displacements / strains in topping steel at all critical locations (refer section 5 for details)
4	**Structure restraint**	Inadequate or ineffective tie-back to stabilise main structural elements, eg, columns		Inadequate steel, lack of proper anchorage of tie reinforcement, or inadequate ductility to cope with relative movements	Assess displacements, ductility demand and capacity to tie the column when subject to maximum displacements (refer section 5 for details)
5	**Cut-outs and penetrations**	Adverse effects of cut-outs or modifications to standard units or floor details		1) Loss of shear capacity; 2) Loss of moment capacity; 3) Crack initiation; 4) Unsupported sections of unreinforced unit; 5) Higher bearing stresses on ledge	Assess detrimental effects on floor under maximum expected displacements (refer section 5 for details)

7.5 Investigation and reporting

Considerable care is needed in planning and carrying out the investigation and reporting on it. The objective must be to cause a minimum of inconvenience consistent with obtaining the required information. There is every prospect that the knowledge of the investigation will raise questions of safety in the minds of occupants. Information given needs to be short and to the point and worded in a way that does not cause unnecessary or undue concern.

It is recommended that those responsible for the assessment develop a clear, written plan outlining the proposed approach. The plan should cover the following issues:

- notification of original designer
- clear definition of purpose and scope of investigation
- access and disruption issues
- the prospect of questions and concerns from the owners and occupants about safety implications for the existing building
- communication with the owner, occupants and the territorial authority
- content and distribution of information
- confidentiality of information.

8 Retrofit of hollow-core floor systems

8.1 General considerations

This section provides guidance and options in methods of retrofitting existing buildings incorporating hollow-core floor units. Retrofitting of existing buildings incorporating hollow-core floors may require strengthening of the hollow-core units and/or releasing the restraint of the hollow-core units to prevent brittle failure of the units. As the objective is the survival of the floor system during inelastic deformation of the seismic resisting elements of the building, the extent of retrofit may vary over the height of the building.

Where it is not practical to strengthen the hollow-core units or to release the restraint including strains within the hollow-core units, it may be necessary to provide catch frames to support the lower potion of the hollow-core units in the event that web splitting or delamination occurs.

8.2 Performance expectations and requirements

As a starting point, the objective of any retrofit solution should be to bring the structural performance of the floor and structure up to the standard required of a new building. Performance expectations and requirements would be as described in section 4 and as implicit in the design criteria presented in section 6. These could be described as representing new building standard (NBS).

If retrofit to 100% of NBS cannot reasonably be achieved, then performance "as nearly as is reasonably practicable to that of a new building" should be aimed for. Note that the overall measure of the %NBS achieved will be that of the lowest performing aspect.

As a minimum, more than 33% NBS must be achieved to avoid classification of the building as earthquake-prone.

It is important that the level to be achieved by the retrofit is agreed with the owner on the basis of information on the costs and performance of various alternatives. Two points are of particular note:

- it is likely that, for many critical aspects, for example the end support, the cost of achievement of high levels of performance will not be significantly greater than for achievement of lower levels; much of the cost will be in set-up, labour and disruption
- the expected performance of the overall structure may be less than 100% NBS and incline the designer to settle for less than 100% NBS in the floor retrofit. Such a temptation should be resisted at least to the extent of examining the probabilities and consequences of failure of the overall structure and the floor elements.

8.3 Retrofit options – overview

Table 8.1 is a summary of retrofit issues that should be considered, showing some basic retrofit options for each. This is intended to give a brief overview and to act as a prompt for further ideas.

Table 8.1: Summary of retrofit issues and approaches

Section A – Demand issues		
a	Earthquake-induced displacements – deflections, rotations, twists	Can markedly affect hollow-core floor functional capacity – support, slab action, diaphragm role and structure restraint
b	Critical dimensions of hollow-core units	Small changes in dimensions can change structural properties markedly – for example, the minimum width of web
c	Beam elongation	Differential displacement can fracture steel that provides diaphragm action and structure restraint; can reduce effective width of supporting ledge
d	Vertical seismic load	May be a significant proportion of the gravity load and thus increase shear in webs of units; increases relative rotations at support
e	Tensile strength of concrete	A critical factor in determining the shear capacity of units and the support capacity of supporting ledges
f	Gravity load	Generally dead load of units and topping will be on simply supported basis; subsequent load will be on the basis of some fixity at the supports, depending on the amount and detailing of top steel

Section B – Capacity issues				
Ref no.	**Critical floor function**	**Nature or cause of failure**	**Contributory cause / effect**	**Retrofit options**
1	**End support**	a Insufficient seating	Reduction due to construction tolerances/errors	Add / extend supporting ledge
			Insufficient edge distance	
			Less than minimum bearing	
			Insufficient allowance for beam elongation	1) Stiffen building; or 2) Add supporting ledge
			Insufficient allowance for relative rotation	1) Stiffen building; or 2) Add supporting ledge
2	**Slab action**			
2.1	Bending moment effects	a Positive moment failure	Relative rotation	1) Stiffen building; 2) Insert shear dowels
		b Negative moment failure	Relative rotation or end moment	1) Stiffen building; 2) Insert shear dowels; 3) Sawcut reinforcement
		c Vertical seismic loading – up	1) Makes (a) above worse; 2) Inadequate negative moment capacity at centre span	1) Stiffen building; 2) Insert shear dowels; 3) Increase negative moment capacity at centre span
		d Vertical seismic loading – down	1) Makes (b) above worse; 2) Inadequate positive moment capacity at centre span; 3) Inadequate negative moment capacity	1) Stiffen building; 2) Insert shear dowels; 3) Increase moment capacity at centre span; 4) Sawcut topping reinforcement at support;

Section B – Capacity issues				
Ref no.	**Critical floor function**	**Nature or cause of failure**	**Contributory cause / effect**	**Retrofit options**
2.2	Shear / torsion effects	a Torsional failure	Twisting induced by structure displacements	1) Stiffen building to reduce displacements; 2) Isolate units from effects of displacements; 3) Insert shear dowels
		b Web splitting	Shear due to load or displacement	1) Stiffen building to reduce displacements; 2) Isolate units from effects of displacements; 3) Insert shear dowels
		c Diagonal tension in negative moment zones	Shear / bending moment combination due to load or displacement	1) Stiffen building to reduce displacements; 2) Isolate units from effects of displacements; 3) Insert shear dowels; 4) Suppress crack propagation
		d Vertical seismic loading – up	Makes effects of 3 a), b), c) worse	1) Allow for in retrofit solution
		e Vertical seismic loading – down	Makes effects of 3 a), b), c) worse	1) Allow for in retrofit solution
3	**Diaphragm action**	a Failure of linking slab	Differential elongation	1) Stiffen building to prevent or reduce beam elongation effects; 2) Reduce stiffness of connection of slab to surrounding structure
			Differential vertical displacements	1) Stiffen building to prevent or reduce effects of relative vertical displacements; 2) Reduce stiffness of connection of slab to surrounding structure
			Shear forces to be transferred	1) Increase shear capacity of topping slab
		b Failure of topping steel	Insufficient ductility to cope with movements and/or diaphragm loads	1) Insert replacement reinforcement with capability to deform; 2) Review need for or mechanisms of diaphragm action
4	**Structure restraint**	Inadequate or ineffective tie-back to stabilise main structural elements	Inadequate steel, lack of proper anchorage of tie reinforcement, or inadequate ductility to cope with relative movement	1) Install continuous tie with effective anchorage to take forces involves and ability to cope with anticipated movements
5	**Cut-outs and penetrations**	Adverse effects of cut-outs or modifications to standard units or floor details	1) Loss of shear capacity; 2) Loss of moment capacity; 3) Crack initiation; 4) Unsupported sections of unreinforced unit; 5) Higher bearing stresses on ledge	Some of the above options could be considered, but the retrofit will probably need to be specially matched to the circumstances

Although Table 8.1 is set out in sections covering end support, slab action, structure restraint and cut-outs/penetrations, it may be seen that some retrofit options deal with more than one deficiency in performance.

As far as possible the retrofit options described in more detail below have been presented in the order shown in Table 8.1.

8.4 Retrofit options

8.4.1 Building structure

For some buildings with stiff structural systems the hollow-core floor system may be demonstrated to have the capacity to accept the deformation imposed on the floor under the inelastic deformation of the building at the ultimate limit state. In this case, provided no detail issues such as end support exist, no retrofit will be necessary.

If structural deformations are too high, it may be practical to stiffen the structural elements of a building sufficiently that the deformations induced on the hollow-core floor can be safely absorbed or resisted. The cost of such stiffening and the disruption involved will vary according to circumstances and it will be necessary to examine these issues and the impact on the functionality of the building.

8.4.2 End support

Loss of support can occur where the hollow-core units run parallel to a ductile reinforced concrete frame in which plastic hinge elongation is occurring. There may also be additional seating demand caused by rotations between the floor system and structural frame at the support. The overall movement of the hollow-core on the seating may be sufficient to cause loss of support. The units should have a 30 mm minimum seating, not including cover concrete, after the maximum elongation has occurred.

Industry practice was to install units with as little as 50 mm seating or less. Additional support is normally required.

The following detail is recommended for improving the support of the hollow-core units.

Figure 8.1: Enhanced support details

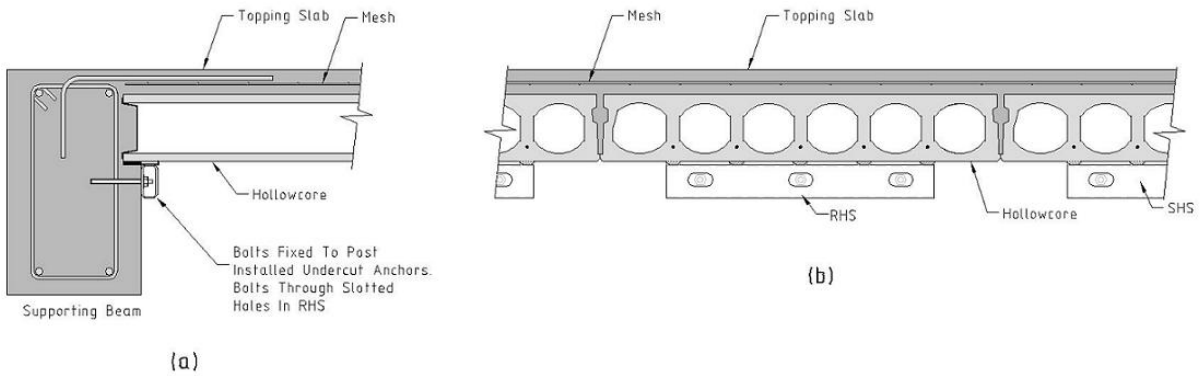

The minimum length of the RHS should be 75% of the width of the hollow-core unit being supported and each length should be fixed with a minimum of three M16 bolts. The RHS should not be glued to the hollow-core unit and no mortar should be placed between the RHS and the underside of the hollow-core unit. It is important the RHS does not develop restraint under displacements causing rotation of the supporting beam. Similarly no bearing strip is necessary.

The rounded corners of the RHS have been demonstrated to be important in the prevention of induced cracking of the hollow-core webs.

Angles or channel sections should not be used as the sharp edges may initiate cracking of the hollow-core units.

Fire rating of the RHS support is not necessary providing the additional support is not required under normal gravity loading.

The connection of the RHS to the edge beam should be designed for the moment induced by the eccentricity of loading between the centreline of the top flange of the RHS and the interface of the RHS with the support beam.

The RHS also confines the concrete directly under the hollow-core and prevents spalling of the cover concrete. The bolts securing the RHS should be anchored within the reinforcing cage for the supporting beam.

It is necessary to locate reinforcement and stirrups in the supporting beam prior to drilling the holes for the bolts securing the RHS. Slotted holes in RHS allow standardisation of this component for most applications.

Where the RHS is installed across a plastic hinge region in the frame supporting the hollow-core, the slotted holes allow for plastic hinge elongation in the supporting beam without inducing shear failure of the bolts securing the RHS to the supporting bam.

In new construction this detail is preferable to the use of a hairpin detail when the seating of the hollow-core units does not achieve code requirements.

8.4.3 Slab action

For most buildings where the deformations imposed on the hollow-core floor exceed the deformation capacity of the hollow-core floor, the hollow-core floor will require strengthening, selective weakening or the provision of dowels or catch frames to maintain the necessary integrity.

Retrofit options are included below for the following conditions:

- release of negative moment restraint on hollow-core
- enhancement of positive moment capacity of hollow-core
- enhancement of hollow-core shear capacity and slab integrity
- reducing stress concentrations at ends of starters to edge detail
- securing of the “alpha” slab (the floor unit adjacent to the surrounding structure).

8.4.3.1 Release of negative moment restraint on hollow-core

If the hairpin detail has been used at the end of the hollow-core units – where insitu concrete has extended into the hollow-cores at the ends of the units or where the hollow-core units are seated on a mortar pad, the interface between the hollow-core units and the supporting beam may develop significant negative moment capacity. Loading conditions to consider are gravity, rotation of the supporting beam under deformation of the seismic resisting system parallel to the span of the hollow-core units and vertical accelerations under seismic.

Strengthening the interface by reinforcing the joint between the topping to the hollow-core and the top of the support beam increases forces and shear induced in unreinforced webs of the hollow-core units. Reinforcing the interface between the support beam and the topping of hollow-core is therefore undesirable.

The preferred option is to reduce the restraint of the hollow-core at the supporting beam so that the stresses induced in the unreinforced webs of the hollow-core units are at a more acceptable level.

If concrete infill has not been placed in the ends of the cores and the units are supported on an insitu concrete corbel or a precast ledge without a mortar pad, testing indicates that the units will be effectively released under the effects of negative moment.

If the units are supported on mortar bedding, the concrete infill has been placed in the ends of the cores or the hairpin detail has been used, it is recommended that the extent of any restraint be established and if necessary the end restraint be released.

The hairpin detail involved the cutting of slots in the top of the hollow-core units to allow concrete to be placed and vibrated into the core. This detail develops significant restraint at the ends of the hollow-core units.

It is assessed that end restraint will not be effective if the topping slab has cracked in line with the end of the hollow-core units and the crack is in excess of 2 mm in width. Under these conditions the ends of the hollow-core units can be assumed to be released under negative moment effects and no further action need be taken.

If the units are not effectively released and diaphragm requirements permit, the restraint on the hollow-core units from the supporting beam may be reduced by drilling of the concrete at the junction of the hollow-core and supporting beam.

It is important that any drilling should not damage the hollow-core unit as it may act as a stress concentration in the hollow-core and initiate cracking of the unreinforced web.

Drilling across the width of the core of the hollow-core is more effective than at the end of the webs to the hollow-core unit.

Figure 8.2: Release of restraint of each of hollow-core units

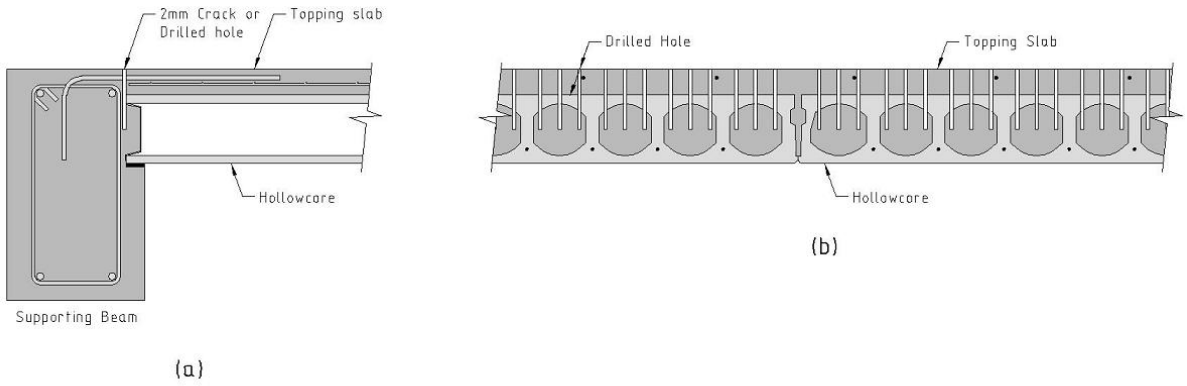

Note: Reduction of the negative moment capacity is only appropriate where the hollow-core units, without the development of negative moment, have sufficient strength to carry the gravity and earthquake induced vertical loads. Where the negative moment capacity is required under gravity load, webs of the hollow-core units will need to be strengthened.

The location and extent of reinforcement and the alignment of the end of the hollow-core units should be accurately determined prior to cutting:

- Saw cutting of topping and cutting of a selected number of the steel reinforcing starters in the topping at the junction of hollow-core and the support beam is not recommended.

8.4.3.2 Enhancement of positive moment capacity of hollow-core

Where rotations of the supporting beam occur under inter-storey drift in the direction parallel with the hollow-core units, it is possible to develop positive moments in the hollow-core units at the support. Positive moments may also be induced at the support by vertical seismic effects.

A suggested detail for enhancing the strength of the hollow-core units under positive movement of the support is to apply FRP to the underside right up to the junction with the face of the supporting beam. This will confine the position of the potential failure point to the face of the beam. The FRP must not be anchored into the support beam so that sliding movement is still possible.

To safeguard the unit from failure at the beam face an RHS should be provided at the support.

8.4.3.3 Enhancement of hollow-core shear capacity and flange integrity

Satisfactory performance of the hollow-core units in zones subjected to high shear in the webs due to the development of the negative moment or high gravity loading can be achieved by enhancing the strength of the hollow-core webs.

The shear strength of the webs of the hollow-core units may be enhanced by the following methods:

i. steel hangers
ii. FRP hangers
iii. void reinforcement.

8.4.4 Steel hangers

Provision of steel hangers at regular centres along the hollow-core in areas of high-induced shear stress is one method of enhancing the strength of the hollow-core web.

Figure 8.3: Steel hangers

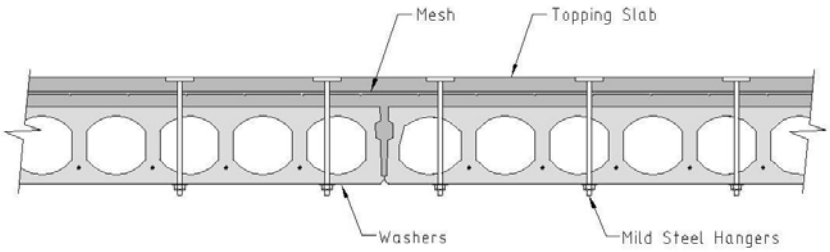

These hangers need to be anchored near the top surface of the topping and on the underside of the hollow-core. Adequate washers should be used on the underside of the hollow-core to ensure an adequate spread of load. Threaded ends should be provided on the underside so that the hangers can be pre-tensioned. Functional requirements normally require the steel plates to be embedded in the concrete topping. The use of mechanical anchors anchored within the depth of the topping may be an acceptable alternative.

Exposed washers and nuts at the end of the hangers on the underside of the hollow-core are normally satisfactory as the underside of the units either occur in the ceiling space or are in an industrial environment.

The hangers should be tensioned to induce compression in the web of the hollow-core unit, thereby delaying the onset of cracking of the unreinforced web.

It is recommended that a minimum of the two penultimate webs be reinforced with hangers in all hollow-core units.

8.4.5 FRP hangers

FRP hangers can be used as an alternative to steel to strengthen the web of the hollow-core units. As the FRP hangers cannot pre-tensioned, the hangers may not be effective until crack formation develops.

Figure 8.4: FRP hangers

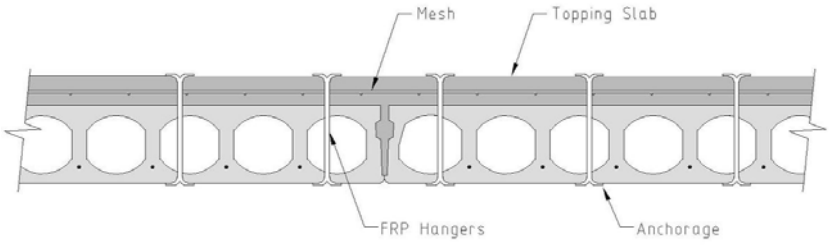

FRP hangers must be capable of being bent tight radius at each end in the anchorage area and to be capable of maintaining the full strength of the hanger around the shard bend. FRP hangers must also be fully anchored to the topping slab and the underside of the hollow-core beyond the tight bend. Infilling of the cores of the hollow-core through which the hangers pass may assist in the hangers contributing to the shear strength of the webs prior to the initiation of the shear crack.

It is recommended that minimum of the two penultimate webs be reinforced with hangers in all hollow-core units.

8.4.6 Unsuitable alternatives

The following details for enhancing the shear strength of the hollow-core were considered and were assessed as unsuitable for the following reasons.

8.4.6.1 Infilling of cores (unsuitable)

Figure 8.5: Infilling of cores

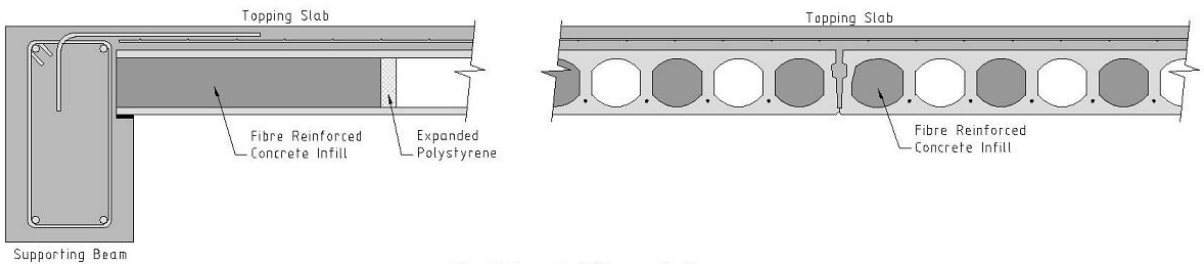

The detail does not provide a tie between the pre-stressed lower chord of the hollow-core and the topping. The detail also increases the stiffness of the hollow-core unit in the positive moment zone and therefore potentially attracts additional load.

8.4.6.2 Locating dowels between units (unsuitable)

Figure 8.6: Dowels at joints between units

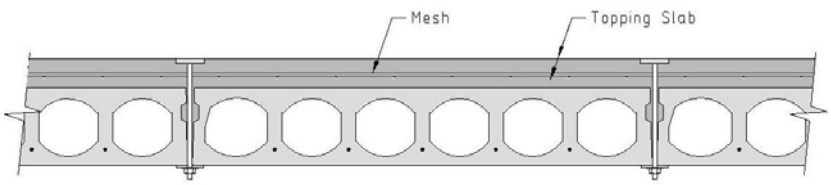

The dowel is located to far from the centre of the hollow-core units and may only prevent failure of the webs at the edge of the units. Failure of the central portion of the lower chord to the hollow-core may occur as indicated.

8.4.6.3 Steel hangers anchored in cores (unsuitable)

Figure 8.7: Topping ties in cores

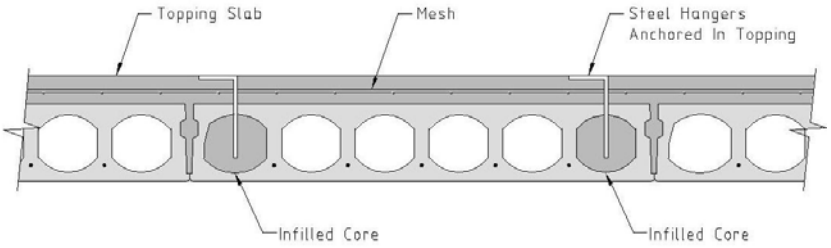

This detail involves chasing into the topping for anchorage of stirrups and drilling into select cores. Steel stirrups are then placed into the core.

The detail does not anchor the lower half of the hollow-core to the top half of the hollow-core. Infilling of cores, stiffens the hollow-core units and potentially attracts additional load that may initiate earlier failure.

8.4.6.4 Reducing stress concentrations at ends of starters to edge detail

Starters for the supporting beam often extend an inadequate and/or a uniform distance into the topping over the hollow-core unit. As a result, the ends of the starters act as a crack initiator.

It is possible to place FRP on the surface of the topping extending beyond the starters to reinforce this weakness. The FRP should not extend beyond the end of the hollow-core as any reinforcement of the section at the end of the hollow-core will increase negative moment development, and may induce a web shear failure. The common length between the FRP and the starters over the hollow-core units must achieve anchorage development of the FRP.

A suggested detail for preventing a crack initiating at the ends of the starters in the topping is shown in Figure 8.8 as follows.

Figure 8.8: FRP to suppress cracking at end of reinforcement

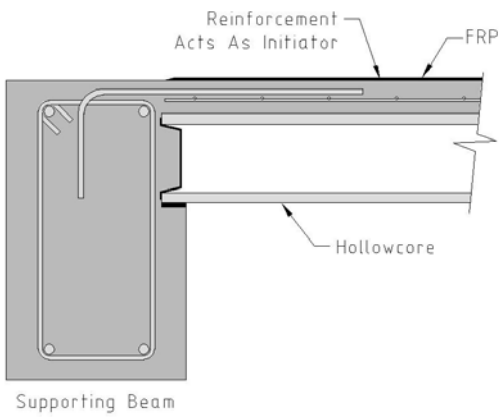

If FRP is used, it may be desirable to place it in an orthogonal strip along the end of the hollow-core.

Figure 8.9: Layout of FRP

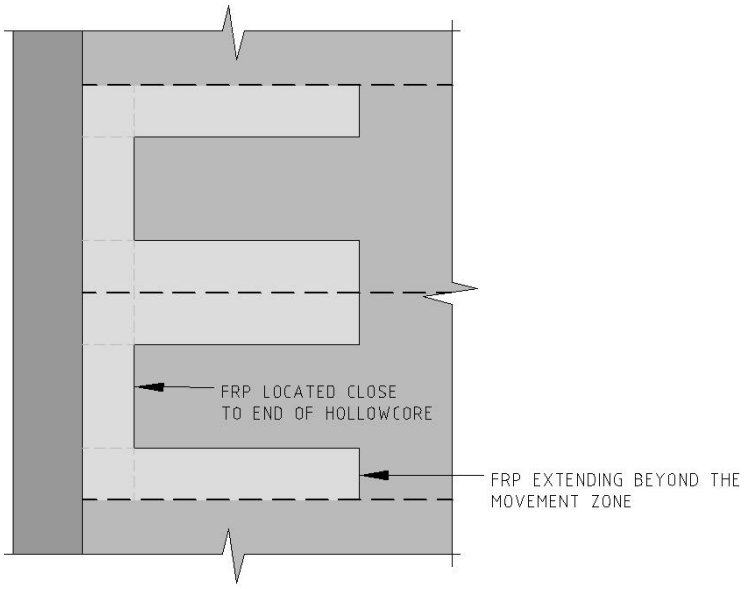

8.4.6.5 Improving integrity of alpha slab

The alpha slab is a hollow-core unit closest and parallel to a ductile seismic resisting frame.

Figure 8.10: Location of "alpha" slab

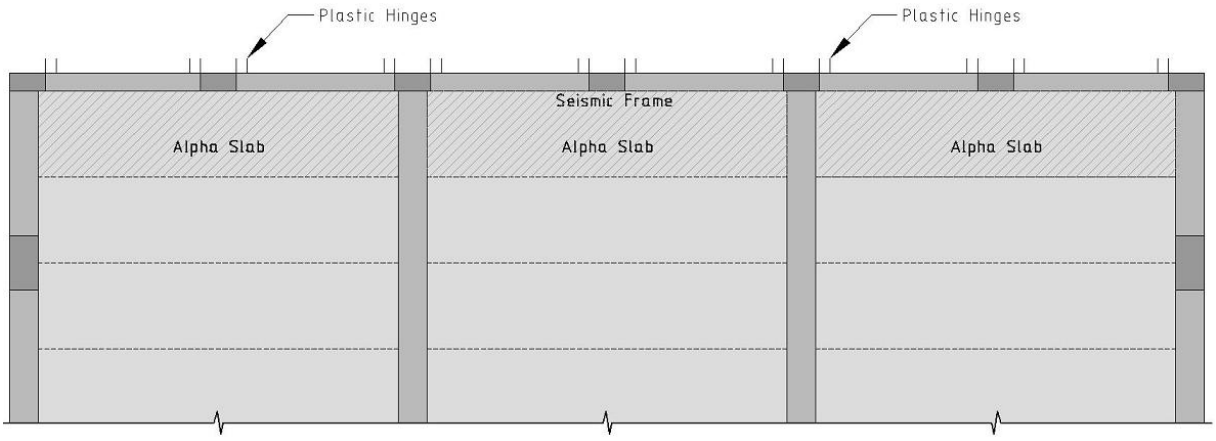

Requirements for the alpha slab vary with the unit in end bays being more critical than those in internal bays. Enhancing the strength of the alpha slab for strain induced affects due to elongation of the plastic hinge in the adjoining seismic frame is not considered desirable or practical.

Suggested methods of achieving compliance with the requirements of NZS1170 are as follows.

8.4.7 Replacement of alpha slab

The highest level of protection and compliance with NZS3101 is achieved by removal of alpha unit and replacement of alpha slab units with an insitu slab meeting the requirements of NZS3101.

Figure 8.11: Replacement option for alpha slab

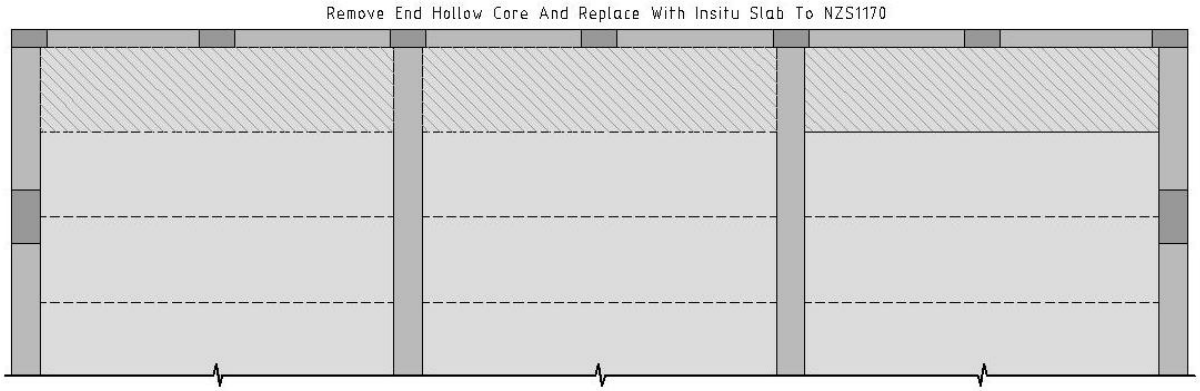

While in theory this option has advantages, the potential damage to starters from the seismic frame and a loss in the integrity of starters from the topping on adjoining hollow-core units are likely to compromise the completed work.

8.4.8 Strengthening of the alpha slab

The webs of the alpha hollow-core unit can be strengthened by the following methods:

- steel hangers
- FRP hangers.

These options will also act to retain the lower portion of the hollow-core units should failure of the webs to the hollow-core alpha unit occur.

8.4.8.1 Use of mild steel hangers at regular centres

Mild steel hangers can be used to strengthen the webs and ultimately support the lower flange of alpha slab.

Figure 8.12: Use of mild steel hangers to strengthen alpha slab

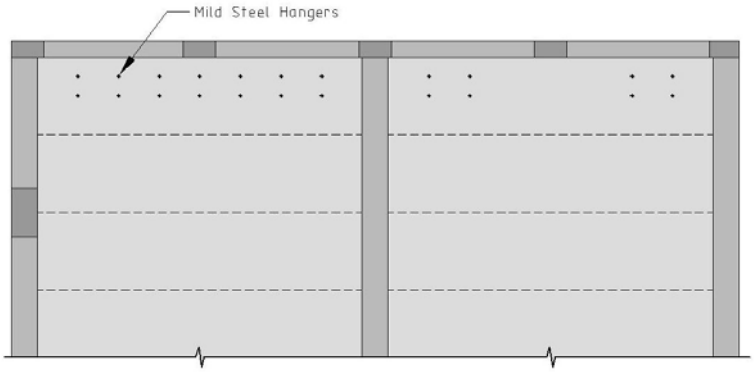

Steel hangers should be located at a maximum spacing of the column spacing divided by four, or 1.2 m, whichever is the lesser.

8.4.8.2 Use of FRP hangers

FRP hangers can also be used to support the lower half of the alpha slab and potentially provide some assistance in preventing crack migration in the webs of the alpha slabs.

Figure 8.13: Use of FRP hangers to strengthen alpha slab

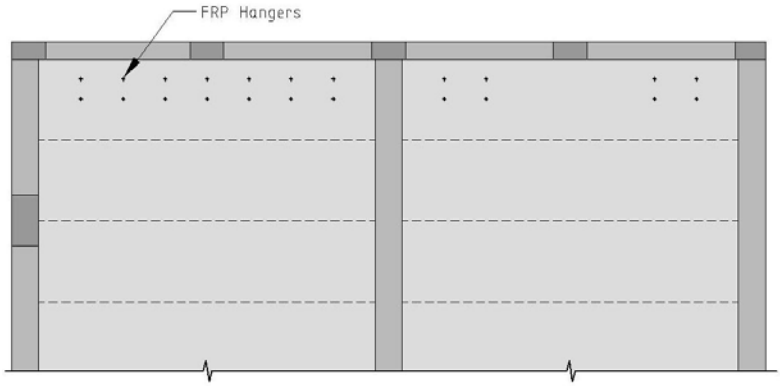

The FRP hangers should be spaced at similar centres to mild steel hangers and provide protection against total collapse of the lower portion of the alpha slab.

8.4.8.3 Provision of steel support beams under alpha slab

An alternative method of restraining the lower chord of the alpha slab is to provide steel beams with the outer edge supported by supporting beam and the inner end supported off the hollow-core unit adjoining the alpha unit. The steel support beams should be provided at a spacing equivalent to the column spacing divided by four.

Figure 8.14: Steel support beams under alpha slab – plan view

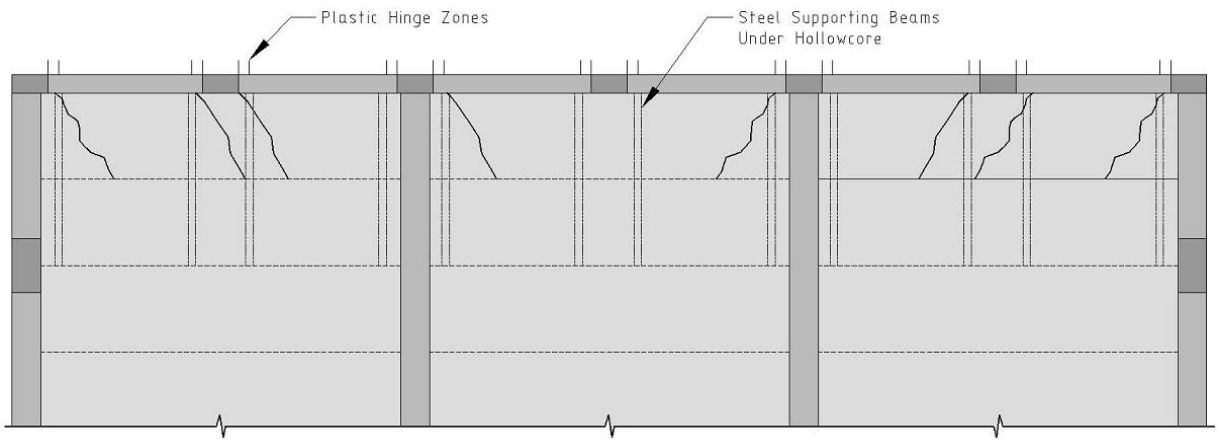

Figure 8.15: Steel supporting beams under alpha slab – cross section

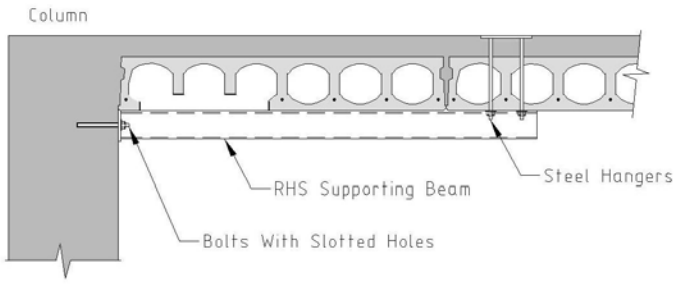

It is important that the fixing of the support beam to the seismic frame occurs with slotted holes that allow for the strains that result from plastic deformation of the seismic frame.

8.4.9 Unsuitable alternatives for the alpha slab

Alternative options considered but dismissed as unlikely to be effective are as follows.

8.4.9.1 Infilling of cores (not suitable)

Infilling of cores of the alpha slab with cement grout or fibre reinforced concrete will stiffen the outer slab and attract more load. Infilling is not expected to improve the strength of unreinforced webs of the alpha slab unit.

Figure 8.16: Infilled core option for alpha slab – not suitable

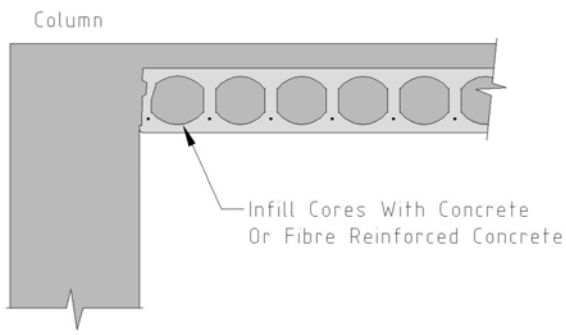

8.4.9.2 Selective weakening of alpha slab (not suitable)

The selective weakening of the alpha slab with priority to weakening the alpha slab in the end bays of a multi bay building or end sections of a single bay building is not recommended.

Any release of the connection between the perimeter seismic frame and the floor diaphragm has the potential to reduce the shear capacity of the interface under seismic loading and may result in the seismic frame being inadequately restrained as the frame experiences in elastic deformation.

Figure 8.17: Selective weakening option for alpha slab – not suitable

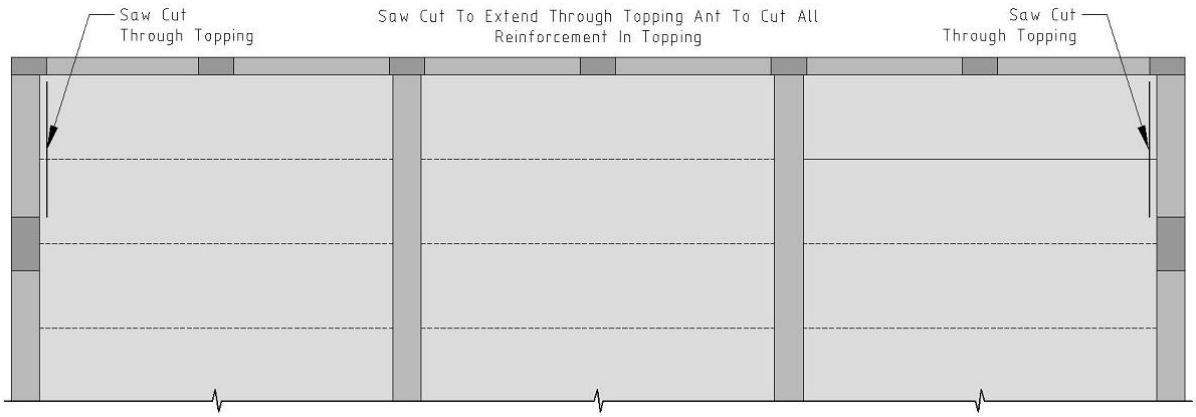

8.4.10 Restraint of columns

An important role of any slab or floor system is to restrain the columns in the horizontal plane. Adequate restraint is assumed in structural analysis models and robust means of achieving this must be maintained.

Methods of restraining the columns of the seismic frame are indicted below.

8.4.10.1 Steel ties in topping

Lateral restraint to intermediate columns in the edge seismic frame can be provided by anchorage of a steel bar in column and extending the rod well into the topping of the floor.

Figure 8.18: Column restraint with steel ties

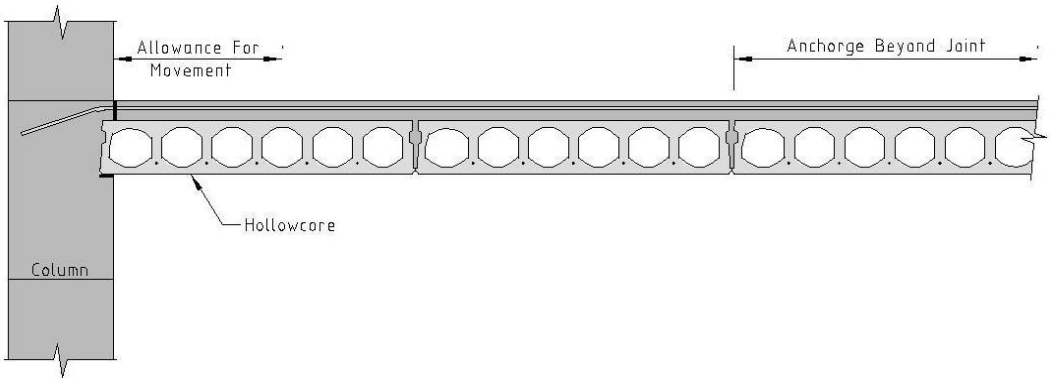

8.4.10.2 Use of steel support beams

An alternative is to extend the steel tie beams used to support the underside of the hollow-core units as the restraint mechanism for the external frame.

The beams need to be extended at least the width of the hollow-core units into the diaphragm and be tied to the diaphragm.

Figure 8.19: Column tie using steel support beams

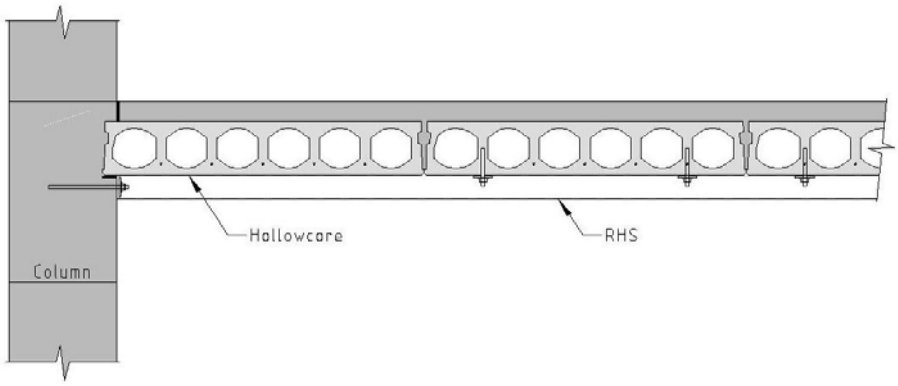

8.4.10.3 Column projecting into hollow-core

Where the columns of the seismic frame penetrate into the alpha hollow-core unit and the hollow-core unit has been cut to fit around the column, it is necessary to provide separation between the projecting faces of the column and the adjoining hollow-core.

Figure 8.20: Separating hollow-core unit from column

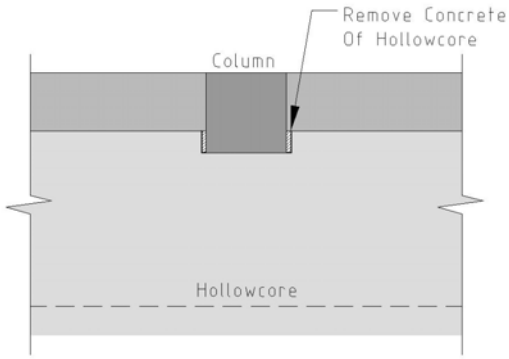

The zone of concrete next to the column should be drilled out to prevent the column inducing excessive shear in outer webs of the hollow-core alpha unit.

Support of the hollow-core should be provided at these locations.

Figure 8.21: Support of units after separation from column

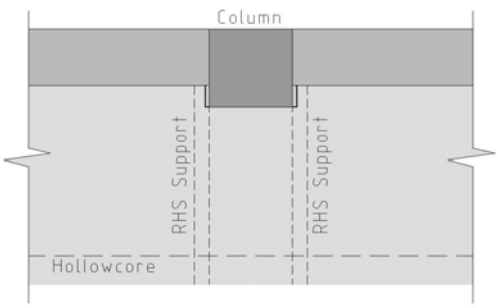

8.4.11 Cut-outs and penetrations in the hollow-core

Any penetrations in the hollow-core of an alpha unit or near the negative moment zone of hollow-core floor should be provided with an alternative support.

The use of steel RHS sections anchored to the underside of the hollow-core with steel dowels in turn anchored in the topping slab, are preferred as dowels can be pre-tensioned to enhance the shear capacity of the unreinforced web of the hollow-core around the penetration.

8.5 Construction considerations

8.5.1 General

Retrofit of hollow-core floors will inevitably involve access to key points in the structure. The work involved in investigation and in the retrofit solutions will be disruptive to occupants who will have to move out or tolerate construction operations while they work. Techniques chosen for investigations and retrofit solutions need to account for the disruption. This means that loss of use of the spaces involved, reduced productivity and costs of alternative accommodation must be considered.

When a building with the potential for the occurrence of known hollow-core failure mechanisms has been identified, a detailed examination of the expected seismic displacements, rotations and their effects on the construction details will quickly indicate which are the critical areas requiring modification, or strengthening. Analyses of some buildings have shown that at-risk areas can be quite localised.

8.5.2 Access

Top access to the affected floor areas will normally be as simple as moving furniture and rolling back the floor coverings.

8.5.2.1 Topping reinforcement

Inadequate (or non-ductile) topping reinforcement will require access to the top surface of the effected floor areas. A variety of proprietary external reinforcement techniques are available to provide extra tensile or flexural strength. These are relatively flat, and can be fitted underneath normal floor coverings. The lack of fire protection could require that the external strengthening is assessed and, replaced after a significant fire; but regular building inspection procedures are currently in place to monitor such building modifications.

8.5.2.2 Slab shear capacity

Shear capacity can be increased by inserting shear ties through holes drilled through the topping; into the required number of cores, and over the slab length that detailed analysis indicates an unacceptable risk of potential shear failure. Those affected cores can be dammed with expanding foam and grouted with a suitable grout.

8.5.2.3 Reinforcement at cut-outs and penetrations

These are usually reinforced at the time of construction, but if the detail provided by the hollow-core designer does not adequately cope with deformation incompatibility in the supporting structure, reinforcing and grouting cores from above may be a simple solution.

Bottom access to affected areas may be complicated by the need to temporarily remove mechanical services ducts, cable trays, etc, which may require a general evacuation of the occupants of that floor.

8.5.2.4 Inadequate seating

Placing additional support brackets, to increase the slab seating length, or to secure beam cover concrete will require the removal of ceilings adjacent to the beams, and possibly the relocation of services penetrating the floor, on the face of the beams.

8.5.2.5 Displacement incompatibility

Again, providing some form of catching frame, or ductile bandage, may be required where analysis shows that displacements, or rotations, across the hollow-core slabs or along their length may exceed the localised capacity of the precast units.

8.5.3 Procurement of specialist services

Designers need to be generally aware of but do not need to become experts in the specialist techniques that are evolving for structural repairs and retrofitting.

Contracts can be managed by inviting proposals from suitably skilled specialists and selecting an experienced team that can:

- demonstrate the required expertise in design and execution
- work with the owner/occupier to minimise disruptions
- meet the required programme
- price to a schedule of work that can be expanded or reduced as the structure is opened up and the actual construction details are determined.

That contracting team would then work with the owner's engineer to develop the optimum solution within the budget set, and in compliance with territorial authority's requirements for earthquake strengthening.

Specifications and contract documents should require the submission of detailed plans on how disruption will be minimised.

8.5.4 Disruption to occupants

Before investigations or retrofit activity commences, mutually acceptable arrangements for access, will need to be negotiated with the tenants, or occupiers, in the affected areas. There may be sensitive issues that the building owner would prefer for occupants not to be aware of. These sensitivities should be respected.

Careful planning of operations is needed to minimize disruption.

Techniques such as temporary dust-proof walls can be provided around the required work areas; cutting and drilling can be done at night; and all repair components can be transported by normal passenger lifts and rubber-tyred trolleys.

Do not forget the disruptive influence of movement of workers and materials.

As areas are completed, they can be handed back to the building occupier, and the strengthening crew can move progressively through the building.

8.5.5 Communications

Effective communication between all parties is vital, particularly between the contractor and occupants/owner. This must be maintained throughout the process.

A building owner is likely to initiate the first communication, by seeking to:

- modify the building in a manner that requires a building consent
- secure the sale of the building to a knowledgeable buyer
- reduce the risk of business disruption.

If the seismic upgrading is not part of a normal building refurbishment, the nature of the disruption will need to be communicated to the occupier.